MIL-STD-1629A
24 NOVEMBER 1980

SUPERSEDING
MIL-STD-1629 (SHIPS)
1 NOVEMBER 1974
MIL-STD-2070 (AS)
12 JUNE 1977

MILITARY STANDARD

PROCEDURES FOR PERFORMING A FAILURE MODE, EFFECTS AND CRITICALITY ANALYSIS

AMSC N3074

FSC RELI

DEPARTMENT OF DEFENSE
Washington, DC 20301

Procedures for performing a Failure Mode, Effects, and Criticality Analysis

MIL-STD-1629A

1. This Military Standard is approved for use by all Departments and Agencies of the Department of Defense.

2. Beneficial comments (recommendations, additions, deletions) and any pertinent data which may be of use in improving this document should be addressed to: Commanding Officer, Engineering Specifications and Standards Department (Code 93), Naval Air Engineering Center, Lakehurst, NJ 08733, by using the self-addressed Standardization Document Improvement Proposal (DD Form 1426) appearing at the end of this document or by letter.

FOREWORD

The failure mode, effects, and criticality analysis (FMECA) is an essential function in design from concept through development. To be effective, the FMECA must be iterative to correspond with the nature of the design process itself. The extent of effort and sophistication of approach used in the FMECA will be dependent upon the nature and requirements of the individual program. This makes it necessary to tailor the requirements for an FMECA to each individual program. Tailoring requires that, regardless of the degree of sophistication, the FMECA must contribute meaningfully to program decision. A properly performed FMECA is invaluable to those who are responsible for making program decisions regarding the feasibility and adequacy of a design approach.

The usefulness of the FMECA as a design tool and in the decision making process is dependent upon the effectiveness with which problem information is communicated for early design attention. Probably the greatest criticism of the FMECA has been its limited use in improving designs. The chief causes for this have been untimeliness and the isolated performance of the FMECA without adequate inputs to the design process. Timeliness is perhaps the most important factor in differentiating between effective and ineffective implementation of the FMECA. While the objective of an FMECA is to identify all modes of failure within a system design, its first purpose is the early identification of all catastrophic and critical failure possibilities so they can be eliminated or minimized through design correction at the earliest possible time. Therefore, the FMECA should be initiated as soon as preliminary design information is available at the higher system levels and extended to the lower levels as more information becomes available on the items in question.

Although the FMECA is an essential reliability task, it also provides information for other purposes. The use of the FMECA is called for in maintainability, safety analysis, survivability and vulnerability, logistics support analysis, maintenance plan analysis, and for failure detection and isolation subsystem design. This coincident use must be a consideration in planning the FMECA effort to prevent the proliferation of requirements and the duplication of efforts within the same contractual program.

CONTENTS

Paragraph		Page
1.	SCOPE	1
1.1	Scope	1
1.2	Application	1
1.3	Numbering system	1
1.4	Revisions	1
1.4.1	Standard	1
1.4.2	Tasks	1
1.5	Method of reference	1
2.	REFERENCED DOCUMENTS	1
2.1	Issues of documents	1
3.	DEFINITIONS	3
3.1	Terms	3
3.1.1	Contractor	3
3.1.2	Corrective action	3
3.1.3	Compensating provision	3
3.1.4	Criticality	3
3.1.5	Criticality analysis (CA)	3
3.1.6	Severity	3
3.1.7	Damage effects	3
3.1.7.1	Primary damage effects	3
3.1.7.2	Secondary damage effects	3
3.1.8	Damage mode	3
3.1.9	Damage mode and effects analysis (DMEA)	4
3.1.10	Detection mechanism	4
3.1.11	Environments	4
3.1.12	Failure cause	4
3.1.13	Failure effect	4
3.1.13.1	Local effect	4
3.1.13.2	Next higher level effect	4
3.1.13.3	End effect	4
3.1.14	Failure mode	4
3.1.15	Failure mode and effects analysis (FMEA)	4
3.1.16	FMECA-Maintainability information	4
3.1.17	Indenture level	4
3.1.17.1	Initial indenture level	5
3.1.17.2	Other indenture levels	5
3.1.18	Interfaces	5
3.1.19	Single failure point	5
3.1.20	Threat mechanism	5
3.1.21	Undetectable failure	5
4.	GENERAL REQUIREMENTS	5
4.1	General	5
4.2	Implementation	5
4.3	FMECA planning	5

LABORATORY ESSENTIALS TRAINING

CONTENTS (Continued)

Paragraph		Page
4.3.1	Worksheet formats	6
4.3.2	Ground rules and assumptions	6
4.3.3	Indenture level	6
4.3.4	Coding system	6
4.3.5	Failure definition	7
4.3.6	Coordination of effort	7
4.4	General procedures	7
4.4.1	Contributing information	7
4.4.1.1	Technical specifications and development plans	7
4.4.1.2	Trade-off study reports	8
4.4.1.3	Design data and drawings	8
4.4.1.4	Reliability data	8
4.4.2	FMEA process	8
4.4.3	Severity classification	9
4.5	FMECA Report	10
4.5.1	Summary	10
4.5.2	Reliability critical item lists	10
4.5.2.1	Category I and Category II failure mode list	11
4.5.2.2	Single failure points list	11
5.	DETAIL REQUIREMENTS	11
5.1	Tasks	11
Tasks		
101	FAILURE MODE AND EFFECTS ANALYSIS	101-1
102	CRITICALITY ANALYSIS	102-1
103	FMECA-MAINTAINABILITY INFORMATION	103-1
104	DAMAGE MODE AND EFFECTS ANALYSIS	104-1
105	FAILURE MODE, EFFECTS, AND CRITICALITY ANALYSIS PLAN.	105-1

FIGURES

Figure		
Task 101		
101.1	Example of a functional block diagram	101-9
101.2	Example of a reliability block diagram	101-10
101.3	Example of FMEA worksheet format	101-11
Task 102		
102.1	Example of CA worksheet format	102-6
102.2	Example of criticality matrix	102-7

CONTENTS (Continued)

Figure		Page
Task 103		
103.1	Example of FMECA-maintainability information worksheet format	103-3
Task 104		
104.1	Example of damage mode and effects analysis format	104-5

APPENDIX

APPENDIX A.	APPLICATION AND TAILORING GUIDE	A-1
Paragraph		
10.	GENERAL	A-1
10.1	Scope	A-1
10.2	Tailoring requirements	A-1
10.3	Duplication of effort	A-1
20.	REFERENCED DOCUMENTS (not applicable)	A-1
30.	DEFINITIONS (not applicable)	A-1
40.	GENERAL REQUIREMENTS	A-1
40.1	Ordering data	A-1
40.2	Data item descriptions (DID)	A-2
50.	APPLICATION CRITERIA	A-2
50.1	General considerations	A-2
50.1.1	Level of detail	A-2
50.1.2	Timing	A-2
50.1.3	Intended use	A-3
50.2	FMEA (task 101)	A-3
50.3	CA (task 102)	A-3
50.4	FMECA-maintainability information (task 103)	A-4
50.5	DMEA (task 104)	A-4
50.6	Criticality number (C_r) calculation example	A-4

1. SCOPE

1.1 Scope. This standard establishes requirements and procedures for performing a failure mode, effects, and criticality analysis (FMECA) to systematically evaluate and document, by item failure mode analysis, the potential impact of each functional or hardware failure on mission success, personnel and system safety, system performance, maintainability, and maintenance requirements. Each potential failure is ranked by the severity of its effect in order that appropriate corrective actions may be taken to eliminate or control the high risk items.

1.2 Application. This standard applies to the acquisition of all designated DoD systems and equipment. It primarily applies to the program activity phases of demonstration and validation and full-scale engineering development; e.g., design, research and development, and test and evaluation. This standard also can be used during production and deployment to analyze the final hardware design or any major modifications. The FMECA tasks contained in this standard apply to all items of equipment. This standard does not apply to software. Appendix A contains additional application and tailoring guidelines.

1.3 Numbering system. The tasks are numbered sequentially as they are introduced into this standard with the first task being number 101.

1.4 Revisions.

1.4.1 Standard. Any general revision of this standard which results in a revision of sections 1, 2, 3, or 4 will be indicated by revision letter after this standard number, together with date of revision.

1.4.2 Tasks. Any revisions of FMECA tasks are indicated by a letter following the task. For example, for task 101, the first revision is 101A, the second revision is 101B. When the basic document is revised, those requirements not affected by change retain their existing date.

1.5 Method of reference. The tasks contained herein shall be referenced by specifying:

a. This standard number.

b. Task number(s).

c. Other data as called for in individual task.

2. REFERENCED DOCUMENTS

2.1 Issues of documents. The following documents of the issue in effect on the date of invitation for bid or request for proposal, are referenced in this standard for information and guidance.

SPECIFICATIONS

Military

MIL-M-24100	Manual, Technical; Functionally Oriented Maintenance Manuals for Systems and Equipment

STANDARDS

Military

MIL-STD-280	Definitions of Item Levels, Item Exchangeability, Models and Related Terms
MIL-STD-470	Maintainability Program Requirements (for Systems and Equipment)
MIL-STD-721	Definitions of Effectiveness Terms for Reliability, Maintainability, Human Factors and Safety
MIL-STD-756	Reliability Prediction
MIL-STD-780	Work Unit Codes for Aeronautical Equipment; Uniform Numbering System
MIL-STD-785	Reliability Program for Systems and Equipment Development and Production
MIL-STD-882	System Safety Program Requirements
MIL-STD-1388	Logistics Support Analysis
MIL-STD-1591	On Aircraft, Fault Diagnosis, Subsystems, Analysis/Synthesis of
MIL-STD-2072	Survivability, Aircraft; Establishment and Conduct of Programs for
MIL-STD-2080	Maintenance Plan Analysis for Aircraft and Ground Support Equipments

HANDBOOKS

Military

MIL-HDBK-217	Reliability Prediction of Electronic Equipment

(Copies of specifications, standards, drawings, and publications required by contractors in connection with specific procurement functions should be obtained from the procuring activity or as directed by the contracting officer.)

3. DEFINITIONS

3.1 Terms. The definitions of terms used herein are in accordance with the definitions in MIL-STD-280, MIL-STD-470, MIL-STD-721, MIL-STD-780, MIL-STD-785, MIL-STD-882, and MIL-STD-1388, with the exception and addition of the following:

3.1.1 Contractor. A private sector enterprise engaged to provide services or products within agreed limits specified by a procuring activity. As used in this standard, the term "contractor" includes government operated activities developing or producing military systems and equipment.

3.1.2 Corrective action. A documented design, process, procedure, or materials change implemented and validated to correct the cause of failure or design deficiency.

3.1.3 Compensating provision. Actions that are available or can be taken by an operator to negate or mitigate the effect of a failure on a system.

3.1.4 Criticality. A relative measure of the consequences of a failure mode and its frequency of occurrences.

3.1.5 Criticality analysis (CA). A procedure by which each potential failure mode is ranked according to the combined influence of severity and probability of occurrence.

3.1.6 Severity. The consequences of a failure mode. Severity considers the worst potential consequence of a failure, determined by the degree of injury, property damage, or system damage that could ultimately occur.

3.1.7 Damage effects. The result(s) or consequence(s) a damage mode has upon the operation, function, or status of a weapon system or any component thereof. Damage effects are classified as primary damage effects and secondary damage effects.

3.1.7.1 Primary damage effects. The result(s) or consequence(s) a damage mode has directly upon a weapon system or any components thereof.

3.1.7.2 Secondary damage effects. The result(s) or consequence(s) indirectly caused by the interaction of a damage mode with a system, subsystem, or component thereof.

3.1.8 Damage mode. The manner by which damage is observed. Generally describes the way the damage occurs.

3.1.9 Damage mode and effects analysis (DMEA). The analysis of a system or equipment conducted to determine the extent of damage sustained from given levels of hostile weapon damage mechanisms and the effects of such damage modes on the continued controlled operation and mission completion capabilities of the system or equipment.

3.1.10 Detection mechanism. The means or methods by which a failure can be discovered by an operator under normal system operation or can be discovered by the maintenance crew by some diagnostic action.

3.1.11 Environments. The conditions, circumstances, influences, stresses and combinations thereof, surrounding and affecting systems or equipment during storage, handling, transportation, testing, installation, and use in standby status and mission operation.

3.1.12 Failure cause. The physical or chemical processes, design defects, quality defects, part misapplication, or other processes which are the basic reason for failure or which initiate the physical process by which deterioration proceeds to failure.

3.1.13 Failure effect. The consequence(s) a failure mode has on the operation, function, or status of an item. Failure effects are classified as local effect, next higher level, and end effect.

3.1.13.1 Local effect. The consequence(s) a failure mode has on the operation, function, or status of the specific item being analyzed.

3.1.13.2 Next higher level effect. The consequence(s) a failure mode has on the operation, functions, or status of the items in the next higher indenture level above the indenture level under consideration.

3.1.13.3 End effect. The consequence(s) a failure mode has on the operation, function, or status of the highest indenture level.

3.1.14 Failure mode. The manner by which a failure is observed. Generally describes the way the failure occurs and its impact on equipment operation.

3.1.15 Failure mode and effects analysis (FMEA). A procedure by which each potential failure mode in a system is analyzed to determine the results or effects thereof on the system and to classify each potential failure mode according to its severity.

3.1.16 FMECA-Maintainability information. A procedure by which each potential failure is analyzed to determine how the failure is detected and the actions to be taken to repair the failure.

3.1.17 Indenture levels. The item levels which identify or describe relative complexity of assembly or function. The levels progress from the more complex (system) to the simpler (part) divisions.

3.1.17.1 Initial indenture level. The level of the total, overall item which is the subject of the FMECA.

3.1.17.2 Other indenture levels. The succeeding indenture levels (second, third, fourth, etc.) which represent an orderly progression to the simpler division of the item.

3.1.18 Interfaces. The systems, external to the system being analyzed, which provide a common boundary or service and are necessary for the system to perform its mission in an undegraded mode; for example, systems that supply power, cooling, heating, air services, or input signals.

3.1.19 Single failure point. The failure of an item which would result in failure of the system and is not compensated for by redundancy or alternative operational procedure.

3.1.20 Threat mechanism. The means or methods which are embodied or employed as an element of a man-made hostile environment to produce damage effects on a weapon system and its components.

3.1.21 Undetectable failure. A postulated failure mode in the FMEA for which there is no failure detection method by which the operator is made aware of the failure.

4. GENERAL REQUIREMENTS

4.1 General. The failure mode, effects, and criticality analysis (FMECA) shall be planned and performed in accordance with the general requirements of this standard and the task(s) specified by the procuring activity.

4.2 Implementation. The FMECA shall be initiated early in the design phase to aid in the evaluation of the design and to provide a basis for establishing corrective action priorities. The FMECA is an analysis procedure which documents all probable failures in a system within specified ground rules, determines by failure mode analysis the effect of each failure on system operation, identifies single failure points, and ranks each failure according to a severity classification of failure effect. This procedure is the result of two steps which, when combined, provide the FMECA. These two steps are:

a. Failure mode and effects analysis (FMEA).

b. Criticality analysis (CA).

4.3 FMECA planning. Planning the FMECA work involves the contractor's procedures for implementing the specified requirements of this standard, updating the FMECA to reflect design changes, and use of

the analysis results to provide design guidance. Worksheet formats, ground rules, analysis assumptions, identification of the lowest indenture level of analysis, coding system description, failure definitions, and identification of coincident use of the FMECA by the contractor's reliability organization and other organizational elements shall be considered in the FMECA planning.

4.3.1 Worksheet formats. The contractor's formats, which organize and document the FMECA and other analysis methods contained herein, shall include the information shown in the example formats in Figures 101.3, 102.1, 103.1 and 104.1. The initial indenture level of analysis shall be identified (item name) on each worksheet, and each successive indenture level shall be documented on a separate worksheet or group of worksheets.

4.3.2 Ground rules and assumptions. The contractor shall develop ground rules and analysis assumptions. The ground rules shall identify the FMECA approach (e.g., hardware, functional or combination), the lowest indenture level to be analyzed, and include general statements of what constitutes a failure of the item in terms of performance criteria and allowable limits. Every effort should be made to identify and record all ground rules and analysis assumptions prior to initiation of the analysis; however, ground rules and analysis assumptions may be added for any item if requirements change. Additional ground rules and analysis assumptions shall be documented and separately identified for inclusion in the FMECA report.

4.3.3 Indenture level. The indenture level applies to the system hardware or functional level at which failures are postulated. Unless otherwise specified, the contractor shall establish the lowest indenture level of analysis using the following guidelines:

a. The lowest level specified in the LSA candidate list to assure complete inputs for each LSA candidate.

b. The lowest indenture level at which items are assigned a catastrophic (Category I) or critical (Category II) severity classification category (see 4.4.3).

c. The specified or intended maintenance and repair level for items assigned a marginal (Category III) or minor (Category IV) severity classification category (see 4.4.3).

4.3.4 Coding system. For consistent identification of system functions and equipment and for tracking failure modes, the contractor shall adhere to a coding system based upon the hardware breakdown structure, work unit code numbering system of MIL-STD-780, or other similar uniform numbering system. The coding system shall be consistent with the reliability and functional block diagram numbering system to provide complete visibility of each failure mode and its relationship to the system.

4.3.5 Failure definition. The contractor shall develop general statements of what constitutes a failure of the item in terms of performance parameters and allowable limits for each specified output. The contractor's general statements shall not conflict with any failure definitions specified by the procuring activity.

4.3.6 Coordination of effort. Consideration shall be given to the requirements to perform and use the FMECA in support of a reliability program in accordance with MIL-STD-785, maintainability program in accordance with MIL-STD-470, safety program in accordance with MIL-STD-882, survivability and vulnerability program in accordance with MIL-STD-2072, logistics support analysis in accordance with MIL-STD-1388, maintenance plan analysis (MPA) in accordance with MIL-STD-2080, fault diagnosis analysis in general accordance with MIL-STD-1591, and other contractual provisions. The contractor shall identify the program organization responsible for performing the FMECA and assure that the FMECA results will be used by other organizational elements to preclude duplication of effort.

4.4 General procedure. The FMECA shall be performed in accordance with the requirements specified herein to systematically examine the system to the lowest indenture level specified by the procuring activity. The analysis shall identify potential failure modes. When system definitions and functional descriptions are not available to the specified indenture level, the initial analysis shall be performed to the lowest possible indenture level to provide optimum results. When system definitions and functional definitions are complete, the analysis shall be extended to the specified indenture level.

4.4.1 Contributing information. System definition requires a review of all descriptive information available on the system to be analyzed. The following is representative of the information and data required for system definition and analysis.

4.4.1.1 Technical specifications and development plans. Technical specifications and development plans generally describe what constitutes and contributes to the various types of system failure. These will state the system objectives and specify the design and test requirements for operation, reliability, and maintainability. Detailed information in the plans will provide operational and functional block diagrams showing the gross functions the system must perform for successful operation. Time diagrams and charts used to describe system functional sequence will aid in determining the time-stress as well as feasibility of various means of failure detection and correction in the operating system. Acceptable performance limits under specified operating and environmental conditions will be given for the system and equipments. Information for developing mission and environmental profiles will describe the mission performance requirements in terms of functions describing the tasks to be performed and related to the anticipated environments for each mission phase and operating mode. Function-time relationships from which the time-stress relationship of the environmental

conditions can be developed shall be presented. A definition of the operational and environmental stresses the system is expected to undergo, as well as failure definitions, will either be provided or must be developed.

4.4.1.2 Trade-off study reports. These reports should identify areas of marginal and state-of-the-art design and explain any design compromises and operating restraints agreed upon. This information will aid in determining the possible and most probable failure modes and causes in the system.

4.4.1.3 Design data and drawings. Design data and drawings identify each item and the item configuration that perform each of the system functions. System design data and drawings will usually describe the system's internal and interface functions beginning at system level and progressing to the lowest indenture level of the system. Design data will usually include either functional block diagrams or schematics that will facilitate construction of reliability block diagrams.

4.4.1.4 Reliability data. The determination of the possible and probable failure modes requires an analysis of reliability data on the item selected to perform each of the system internal functions. It is always desirable to use reliability data resulting from reliability tests run on the specific equipment to be used with the tests performed under the identical conditions of use. When such test data are not available, reliability data from MIL-HDBK-217 or from operational experience and tests performed under similar use conditions on items similar to those in the systems should be used.

4.4.2 FMEA process. The FMEA shall be initiated as an integral part of early design process of system functional assemblies and shall be updated to reflect design changes. Current FMEA analysis shall be a major consideration at each design review from preliminary through the final design. The analysis shall be used to assess high risk items and the activities underway to provide corrective actions. The FMEA shall also be used to define special test considerations, quality inspection points, preventive maintenance actions, operational constraints, useful life, and other pertinent information and activities necessary to minimize failure risk. All recommended actions which result from the FMEA shall be evaluated and formally dispositioned by appropriate implementation or documented rationale for no action. Unless otherwise specified, the following discrete steps shall be used in performing an FMEA:

a. Define the system to be analyzed. Complete system definition includes identification of internal and interface functions, expected performance at all indenture levels, system restraints, and failure definitions. Functional narratives of the system should include descriptions of each mission in terms of functions which identify tasks to be performed

for each mission, mission phase, and operational mode. Narratives should describe the environmental profiles, expected mission times and equipment utilization, and the functions and outputs of each item.

b. Construct block diagrams. Functional and reliability block diagrams which illustrate the operation, interrelationships, and interdependencies of functional entities should be obtained or constructed for each item configuration involved in the system's use. All system interfaces shall be indicated.

c. Identify all potential item and interface failure modes and define their effect on the immediate function or item, on the system, and on the mission to be performed.

d. Evaluate each failure mode in terms of the worst potential consequences which may result and assign a severity classification category (see 4.4.3).

e. Identify failure detection methods and compensating provisions for each failure mode.

f. Identify corrective design or other actions required to eliminate the failure or control the risk.

g. Identify effects of corrective actions or other system attributes, such as requirements for logistics support.

h. Document the analysis and summarize the problems which could not be corrected by design and identify the special controls which are necessary to reduce failure risk.

4.4.3 Severity classification. Severity classifications are assigned to provide a qualitative measure of the worst potential consequences resulting from design error or item failure. A severity classification shall be assigned to each identified failure mode and each item analyzed in accordance with the loss statements below. Where it may not be possible to identify an item or a failure mode according to the loss statements in the four categories below, similar loss statements based upon loss of system inputs or outputs shall be developed and included in the FMECA ground rules for procuring activity approval. Severity classification categories which are consistent with MIL-STD-882 severity categories are defined as follows:

a. Category I - Catastrophic - A failure which may cause death or weapon system loss (i.e., aircraft, tank, missile, ship, etc.)

b. Category II - Critical - A failure which may cause severe injury, major property damage, or major system damage which will result in mission loss.

c. Category III - Marginal - A failure which may cause minor injury, minor property damage, or minor system damage which will result in delay or loss of availability or mission degradation.

d. Category IV - Minor - A failure not serious enough to cause injury, property damage, or system damage, but which will result in unscheduled maintenance or repair.

4.5 FMECA Report. The results of the FMEA and other related analyses shall be documented in a report that identifies the level of analysis, summarizes the results, documents the data sources and techniques used in performing the analysis, and includes the system definition narrative, resultant analysis data, and worksheets. The worksheets shall be organized to first display the highest indenture level of analysis and then proceed down through decreasing indenture levels of the system. The ground rules, analysis assumptions, and block diagrams shall be included, as applicable, for each indenture level analyzed. Interim reports shall be available at each design review to provide comparisons of alternative designs and to highlight the Category I and Category II failure modes, the potential single failure points, and the proposed design corrections. The final report shall reflect the final design and provide identification of the Category I and Category II failure modes and the single failure points which could not be eliminated from the design.

4.5.1 Summary. The report shall contain a summary which provides the contractor's conclusions and recommendations based upon the analysis. Contractor interpretation and comments concerning the analysis and the initiated or recommended actions for the elimination or reduction of failure risks shall be included. A design evaluation summary of major problems detected during the analysis shall be provided in the final report. A list of items omitted from the FMEA shall be included with rationale for each item's exclusion.

4.5.2 Reliability critical item lists. Reliability critical item lists extracted from the FMEA shall be included in the summary. The information provided for each item listed shall include the following:

a. Item identification and FMEA cross-reference.

b. Description of design features which minimize the occurrence of failure for the listed item.

c. Description of tests accomplished that verify design features and tests planned at hardware acceptance or during operations and maintenance that would detect the failure mode occurrence.

d. Description of planned inspections to ensure hardware is being built to design requirements, and inspections planned during down-time or turnaround or during maintenance that could detect the failure mode or evidence of conditions that could cause the failure mode.

e. A statement relating to the history of this particular design or a similar design.

f. Description of the method(s) by which the occurrence of the failure mode is detected by the operator, and whether a failure of a redundant or alternative operating mode, when available, can be detected.

g. Rationale for not eliminating the related failure mode(s).

4.5.2.1 Category I and Category II failure mode list. A list of all Category I (catastrophic) and Category II (critical) failure modes shall be provided. The information described above shall be provided for each Category I and Category II failure mode listed such that it is possible to identify directly the FMEA entry and its related drawings and schematics.

4.5.2.2 Single failure points list. A separate list of all single failure points shall be provided. The information described above shall be provided in the summary for each single failure point listed such that it is possible to identify directly the FMEA entry and its related drawings and schematics. The criticality classification for each single failure point shall be included in the listing.

5. DETAIL REQUIREMENTS

5.1 Tasks. The detail tasks for performing an FMEA and other related analyses follow. The tasks for the related analyses supplement and are dependent upon performing an FMEA in accordance with Task 101.

Custodians:
Army - CR
Air Force - 17

Review Activities:
Navy - SH, OS
Army - EA, AR

Preparing Activity
Navy - AS
(Project No. RELI-0003)

TASK 101

FAILURE MODE AND EFFECTS ANALYSIS

1. Purpose. The purpose of the FMEA is to study the results or effects of item failure on system operation and to classify each potential failure according to its severity.

2. Documents referenced in Task 101:

SPECIFICATIONS

Military

MIL-M-24100	Manual, Technical, Functionally Oriented Maintenance Manuals (FOMM) for Equipment and Systems

STANDARDS

Military

MIL-STD-756	Reliability Prediction
MIL-STD-780	Definitions of Item Levels, Item Exchangeability, Models and Related Terms:

3. Analysis approach. Variations in design complexity and available data will generally dictate the analysis approach to be used. There are two primary approaches for accomplishing an FMEA. One is the hardware approach which lists individual hardware items and analyzes their possible failure modes. The other is the functional approach which recognizes that every item is designed to perform a number of functions that can be classified as outputs. The outputs are listed and their failure modes analyzed. For complex systems, a combination of the functional and hardware approaches may be considered. The FMEA may be performed as a hardware analysis, a functional analysis, or a combination analysis and may be initiated at either the highest indenture level and proceed through decreasing indenture levels (top-down approach) or at the part or assembly level and proceed through increasing indenture levels (bottom-up approach) until the FMEA for the system is complete.

3.1 Hardware approach. The hardware approach is normally used when hardware items can be uniquely identified from schematics, drawings, and other engineering and design data. The hardware approach is normally utilized in a part level up fashion (bottom-up approach); however, it can be initiated at any level of indenture and progress in either direction. Each identified failure mode shall be assigned a severity classification which will be utilized during design to establish priorities for corrective actions.

3.2 Functional approach. The functional approach is normally used when hardware items cannot be uniquely identified or when system complexity requires analysis from the initial indenture level downward through succeeding indenture levels. The functional approach is normally utilized in an initial indenture level down fashion (top-down approach); however, it can be initiated at any level of indenture and progress in either direction. Each identified failure mode shall be assigned a severity classification which will be utilized during design to establish priorities for corrective actions.

3.3 Failure mode severity classification. Severity classifications are assigned to each failure mode and each item to provide a basis for establishing corrective action priorities. First priority shall be given to the elimination of the identified Category I (catastrophic) and Category II (critical) (see General Requirements, 4.4.3) failure modes. Where the loss of input or output at a lower indenture level is critical to the operational success of a higher indenture level, action shall be taken to eliminate or control the identified failure modes. When identified Category I and Category II failure modes cannot be eliminated or controlled to levels acceptable to the procuring activity, alternative controls and recommendations shall be presented to the procuring activity.

4. Procedure. Each single item failure, as its effects are analyzed, is to be considered the only failure in the system. Where a single item failure is non-detectable, the analysis shall be extended to determine the effects of a second failure, which in combination with the first undetectable failure, could result in a catastrophic or critical failure condition. Passive and multiple failures which may result in catastrophic or critical conditions shall also be identified. When safety, redundant, or back-up items exist, failure assumptions shall be broadened to include the failure conditions which resulted in the need for the safety, redundant, or back-up item. Design changes or special control measures shall be identified and defined for all catastrophic (Category I) and critical (Category II) failure modes. All single failure points identified during the analyses shall be uniquely identified on the FMEA worksheets to maintain visibility of these failure modes.

4.1 System definition. The first step in performing the FMEA is to define the system to be analyzed. Functional narratives shall be developed for each mission, mission phase, and operational mode and include statements of primary and secondary mission objectives. The narratives shall include system and part descriptions for each mission phase and operational mode, expected mission times and equipment utilization, functions and output of each item, and conditions which constitute system and part failure.

4.1.1 Mission functions and operational modes. The system definition shall include descriptions of each mission in terms of functions which identify the task to be performed and the functional mode of

operation for performing the specific function. Mission functions and operational modes shall be identified starting at the highest system level and progressing to the lowest indenture level to be analyzed. When more than one method of performing a particular function is available, the alternative operational modes shall be identified. All multiple functions utilizing different equipment or groups of equipment also shall be identified. The functions and outputs for each indenture level also may be presented in a function-output list or in narrative form.

4.1.2 Environmental profiles. The environmental profiles which present the anticipated environmental conditions for each mission and mission phase shall be defined. When a system will be utilized in more than one environment each different environmental profile shall be described. The intended use, through time, of the system and its equipments shall be developed from the mission time statements for each environmental profile. The use time-environment phasing is used in determining the time-stress relationships and the feasibility of failure detection methods and compensating provisions in the operating system.

4.1.3 Mission time. A quantitative statement of system function-time requirements shall be developed and included in the system definition. Function-time requirements shall be developed for items which operate in different operational modes during different mission phases and for items which function only if required.

4.1.4 Block diagrams. Block diagrams which illustrate the operation, interrelationships, and interdependencies of functional entities of a system shall be constructed to provide the ability for tracing failure mode effects through all levels of indenture. Both functional and reliability block diagrams are required to show the functional flow sequence and the series dependence or independence of functions and operations. Block diagrams may be constructed in conjunction with or after defining the system and shall present the system as a breakdown of its major functions. More than one block diagram will usually be required to display alternative modes of operation, depending upon the definition established for the system. All inputs and outputs of the item as a whole shall be shown on the diagram and clearly labeled. Each block shall be designated by a consistent and logical item number that reflects the functional system breakdown order. A uniform numbering system developed in functional system breakdown order is required to provide traceability and tracking through all levels of indenture. MIL-STD-780 provides an example of a uniform numbering system for aeronautical equipment that can be used as a guide in the development of a consistent and logical identification code for block diagrams. Figures 101.1 and 101.2 depict examples of functional and reliability block diagrams.

4.1.4.1 Functional block diagrams. A functional block diagram illustrates the operation and interrelationships between functional entities of a system as defined in engineering data and schematics. A

functional block diagram will provide a functional flow sequence for the system and each indenture level of analysis and present hardware indenture and can be used for both hardware and functional method FMEA's. MIL-M-24100 procedures and techniques for developing major function diagrams may be used for guidance in developing functional block diagrams.

4.1.4.2 Reliability block diagrams. A reliability block diagram defines the series dependence or independence of all functions of a system or functional group for each life-cycle event. The reliability block diagram will provide identification of function interdependencies for the system and can be used for a functional method FMEA. MIL-STD-756 procedures illustrate a method which may be used to develop reliability block diagrams.

5. FMEA worksheet. The documentation of the FMEA is the next step and is accomplished by completing the columns of the approved FMEA worksheet. An example of an FMEA worksheet format is shown in Figure 101.3.

5.1 Identification number. A serial number or other reference designation identification number is assigned for traceability purposes and entered on the worksheet. A uniform identification code in accordance with General Requirements, 4.3.4, shall be used to provide consistent identification of system functions an equipment and provide complete visibility of each failure mode and its relationship to the system function identified in the applicable block diagram.

5.2 Item/functional identification. The name or nomenclature of the item or system function being analyzed for failure mode and effects is listed. Schematic diagram symbols or drawing numbers shall be used to properly identify the item or function.

5.3 Function. A concise statement of the function performed by the hardware item shall be listed. This shall include both the inherent function of the part and its relationship to interfacing items.

5.4 Failure modes and causes. All predictable failure modes for each indenture level analyzed shall be identified and described. Potential failure modes shall be determined by examination of item outputs and functional outputs identified in applicable block diagrams and schematics. Failure modes of the individual item function shall be postulated on the basis of the stated requirements in the system definition narrative and the failure definitions included in the ground rules. The most probable causes associated with the postulated failure mode shall be identified and described. Since a failure mode may have more than one cause, all probable independent causes for each failure mode shall be identified and described. The failure causes within the adjacent indenture levels shall be considered. For example, failure causes at the third indenture level shall be considered when conducting a second

indenture level analysis. Where functions shown on a block diagram are performed by a replaceable module in the system, a separate FMEA shall be performed on the internal functions of the module, viewing the module as a system. The effects of possible failure modes in the module inputs and outputs describe the failure modes of the module when it is viewed as an item within the system. To assist in assuring that a complete analysis is performed, each failure mode and output function shall, as a minimum, be examined in relation to the following typical failure conditions:

a. Premature operation.

b. Failure to operate at a prescribed time.

c. Intermittent operation.

d. Failure to cease operation at a prescribed time.

e. Loss of output or failure during operation.

f. Degraded output or operational capability.

g. Other unique failure conditions, as applicable, based upon system characteristics and operational requirements or constraints.

5.5 Mission phase/operational mode. A concise statement of the mission phase and operational mode in which the failure occurs. Where subphase, event, or time can be defined from the system definition and mission profiles, the most definitive timing information should also be entered for the assumed time of failure occurrence.

5.6 Failure effect. The consequences of each assumed failure mode on item operation, function, or status shall be identified, evaluated, and recorded. Failure effects shall focus on the specific block diagram element which is affected by the failure under consideration. The failure under consideration may impact several indenture levels in addition to the indenture level under analysis; therefore, "local," "next higher level," and "end" effects shall be evaluated. Failure effects shall also consider the mission objectives, maintenance requirements and personnel and system safety.

5.6.1 Local effects. Local effects concentrate specifically on the impact an assumed failure mode has on the operation and function of the item in the indenture level under consideration. The consequences of each postulated failure affecting the item shall be described along with any second-order effects which result. The purpose of defining local effects is to provide a basis for evaluating compensating provisions and for recommending corrective actions. It is possible for the "local" effect to be the failure mode itself.

5.6.2 Next higher level. Next higher level effects concentrate on the impact an assumed failure has on the operation and function of the items in the next higher indenture level above the indenture level under consideration. The consequences of each postulated failure affecting the next higher indenture level shall be described.

5.6.3 End effects. End effects evaluate and define the total effect an assumed failure has on the operation, function, or status of the uppermost system. The end effect described may be the result of a double failure. For example, failure of a safety device may result in a catastrophic end effect only in the event that both the prime function goes beyond limit for which the safety device is set and the safety device fails. Those end effects resulting from a double failure shall be indicated on the FMEA worksheets.

5.7 Failure detection method. A description of the methods by which occurrence of the failure mode is detected by the operator shall be recorded. The failure detection means, such as visual or audible warning devices, automatic sensing devices, sensing instrumentation, other unique indications, or none shall be identified.

5.7.1 Other indications. Descriptions of indications which are evident to an operator that a system has malfunctioned or failed, other than the identified warning devices, shall be recorded. Proper correlation of a system malfunction or failure may require identification of normal indications as well as abnormal indications. If no indication exists, identify if the undetected failure will jeopardize the mission objectives or personnel safety. If the undetected failure allows the system to remain in a safe state, a second failure situation should be explored to determine whether or not an indication will be evident to an operator. Indications to the operator should be described as follows:

a. Normal. An indication that is evident to an operator when the system or equipment is operating normally.

b. Abnormal. An indication that is evident to an operator when the system has malfunctioned or failed.

c. Incorrect. An erroneous indication to an operator due to the malfunction or failure of an indicator (i.e., instruments, sensing devices, visual or audible warning devices, etc.).

5.7.2 Isolation. Describe the most direct procedure that allows an operator to isolate the malfunction or failure. An operator will know only the initial symptoms until further specific action is taken such as performing a more detailed built-in-test (BIT). The failure being considered in the analysis may be of lesser importance or likelihood than another failure that could produce the same symptoms and this must be considered. Fault isolation procedures require a specific

action or series of actions by an operator, followed by a check or cross reference either to instruments, control devices, circuit breakers, or combinations thereof. This procedure is followed until a satisfactory course of action is determined.

5.8 Compensating provisions. The compensating provisions, either design provisions or operator actions, which circumvent or mitigate the effect of the failure shall be identified and evaluated. This step is required to record the true behavior of the item in the presence of an internal malfunction or failure.

5.8.1 Design provisions. Compensating provisions which are features of the design at any indenture level that will nullify the effects of a malfunction or failure, control, or deactivate system items to halt generation or propagation of failure effects, or activate backup or standby items or systems shall be described. Design compensating provisions include:

a. Redundant items that allow continued and safe operation.

b. Safety or relief devices such as monitoring or alarm provisions which permit effective operation or limits damage.

c. Alternative modes of operation such as backup or standby items or systems.

5.8.2 Operator actions. Compensating provisions which require operator action to circumvent or mitigate the effect of the postulated failure shall be described. The compensating provision that best satisfies the indication(s) observed by an operator when the failure occurs shall be determined. This may require the investigation of an interface system to determine the most correct operator action(s). The consequences of any probable incorrect action(s) by the operator in response to an abnormal indication should be considered and the effects recorded.

5.9 Severity classification. A severity classification category (see 4.4.3) shall be assigned to each failure mode and item according to the failure effect. The effect on the functional condition of the item under analysis caused by the loss or degradation of output shall be identified so the failure mode effect will be properly categorized. For lower levels of indenture where effects on higher indenture levels are unknown, a failure's effect on the indenture level under analysis shall be described by the severity classification categories.

5.10 Remarks. Any pertinent remarks pertaining to and clarifying any other column in the worksheet line shall be noted. Notes regarding recommendations for design improvements shall be recorded and

further amplified in the FMECA report, General Requirements, 4.5. This entry also may include a notation of unusual conditions, failure effects of redundant items, recognition of particularly critical design features or any other remarks that amplify the line entry. Since it is improbable that all failure modes in Category I and Category II can be designed out, information shall be provided that other reasonable actions and considerations are or have been accomplished to reduce occurrence of a given failure mode and provide a qualitative basis or rationale for acceptance of the design. The rationale for acceptance of Category I and Category II failure modes shall address the following:

a. Design. Those features of the design that relate to the identified failure mode that minimize the occurrence of the failure mode; i.e., safety factors, parts derating criteria, etc.

b. Test. Those tests accomplished that verify the design features and tests at hardware acceptance or during ground turnaround or maintenance that would detect the failure mode occurrence.

c. Inspection. The inspection accomplished to ensure that the hardware is being built to the design requirements and the inspection accomplished during turnaround operations or maintenance that would detect the failure mode or evidence of conditions that could cause the failure mode.

d. History. A statement of history relating to this particular design or a similar design.

6. Ordering data. The following details shall be specified in the appropriate contractual documents:

a. FMECA plan, if required (see Task 105).

b. Indenture level (see General Requirements, 4.3.3).

c. DI-R-7085 (FMECA Report should be specified when deliverable data is desired in conjunction with general requirements, Section 4.5).

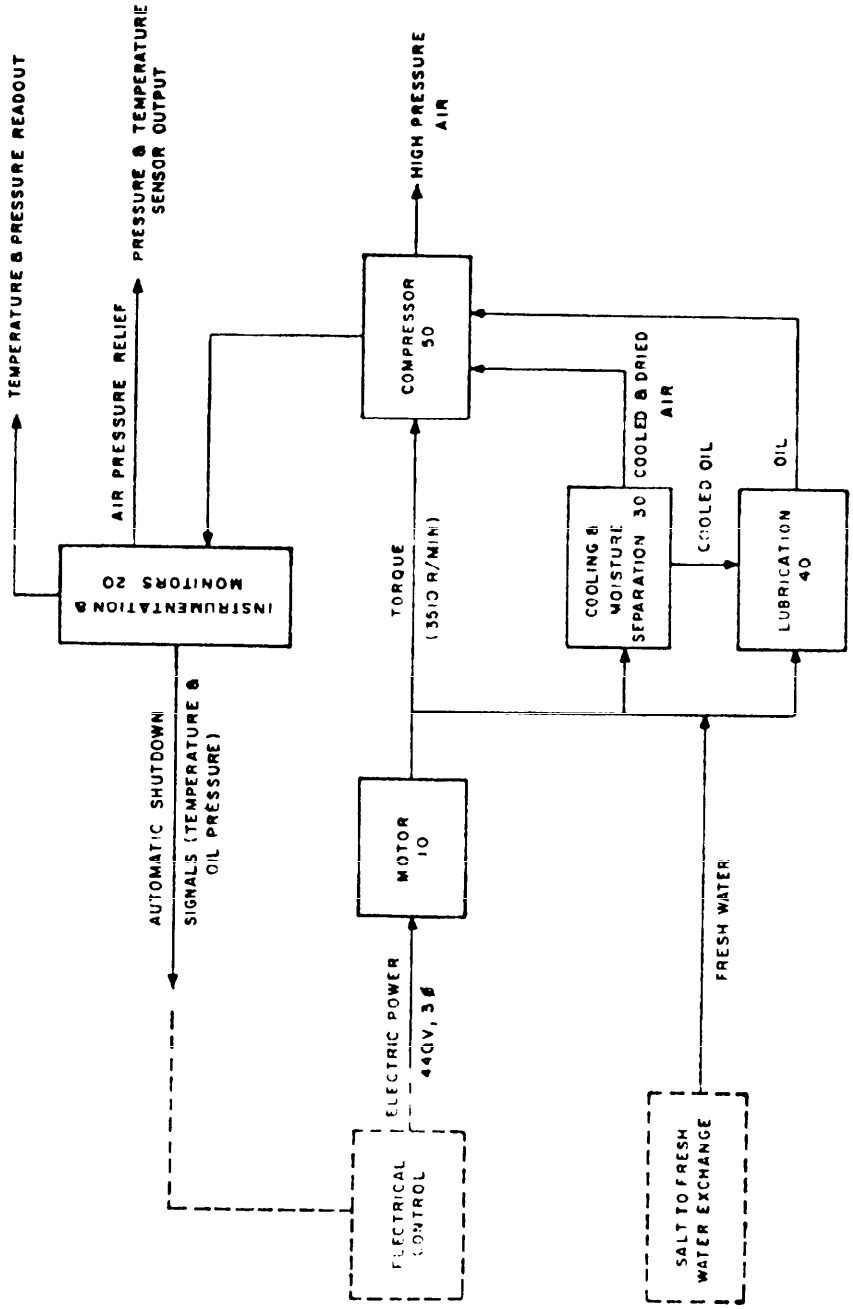

Figure 101.1 Example of a functional block diagram

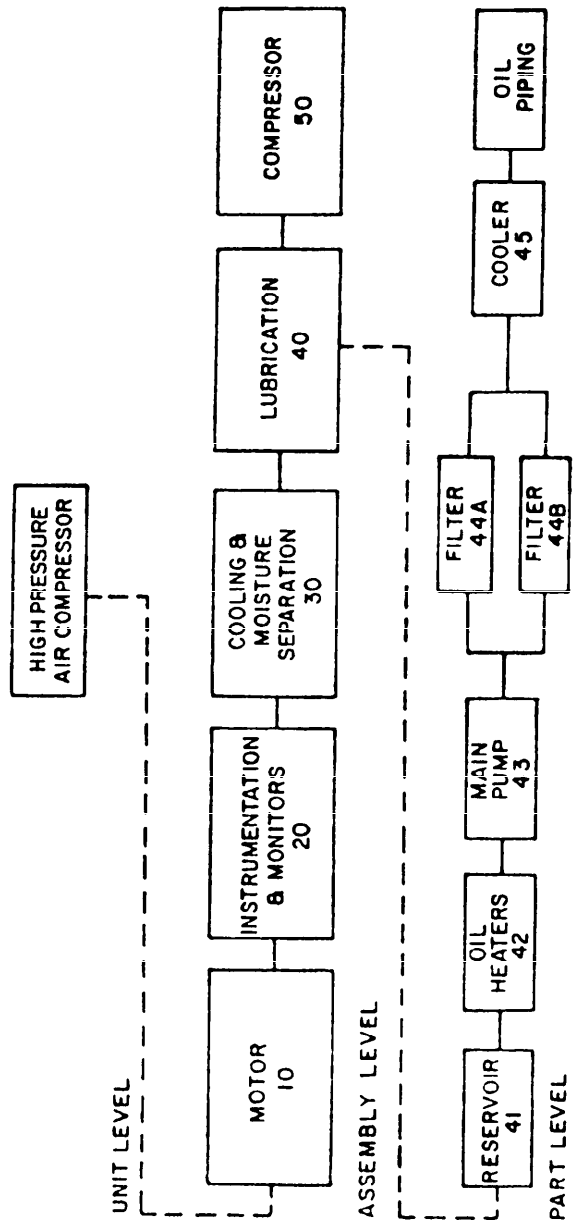

Figure 101.2 Example of a reliability block diagram

FAILURE MODE AND EFFECTS ANALYSIS

SYSTEM _____
INDENTURE LEVEL _____
REFERENCE DRAWING _____
MISSION _____

DATE _____
SHEET _____ OF _____
COMPILED BY _____
APPROVED BY _____

IDENTIFICATION NUMBER	ITEM/FUNCTIONAL IDENTIFICATION (NOMENCLATURE)	FUNCTION	FAILURE MODES AND CAUSES	MISSION PHASE/ OPERATIONAL MODE	FAILURE EFFECTS			FAILURE DETECTION METHOD	COMPENSATING PROVISIONS	SEVERITY CLASS	REMARKS
					LOCAL EFFECTS	NEXT HIGHER LEVEL	END EFFECTS				

Figure 101.3 Example of FMEA worksheet format

TASK 102

CRITICALITY ANALYSIS

1. Purpose. The purpose of the criticality analysis (CA) is to rank each potential failure mode identified in the FMEA Task 101, according to the combined influence of severity classification and its probability of occurrence based upon the best available data.

1.1 Application. The CA, Task 102, supplements the FMEA, Task 101, and shall not be imposed without the imposition of Task 101.

2. Documents referenced in Task 102:

HANDBOOKS

Military

MIL-HDBK-217 Reliability Prediction of Electronic Equipment

3. Analysis approach. One approach from the two specified in 3.1 and 3.2 of Task 102 shall be selected. The availability of specific parts configuration data and failure rate data will determine the analysis approach to be used. The qualitative approach is appropriate when specific failure rate data are not available. The failure probability levels, when used, should be modified as the system is better defined. As parts configuration data and failure rate data become available, criticality numbers should be calculated and incorporated in the analysis.

3.1 Qualitative approach. Failure modes identified in the FMEA are assessed in terms of probability of occurrence when specific parts configuration or failure rate data are not available. Individual failure mode probabilities of occurrence should be grouped into distinct, logically defined levels, which establish the qualitative failure probability level for entry into the appropriate CA worksheet column. Probability of occurrence levels are defined as follows:

a. Level A - Frequent. A high probability of occurrence during the item operating time interval. High probability may be defined as a single failure mode probability greater than 0.20 of the overall probability of failure during the item operating time interval.

b. Level B - Reasonably probable. A moderate probability of occurrence during the item operating time interval. Probable may be defined as a single failure mode probability of occurrence which is more than 0.10 but less than 0.20 of the overall probability of failure during the item operating time.

c. Level C - Occasional. An occasional probability of occurrence during item operating time interval. Occasional probability may be defined as a single failure mode probability of occurrence which is more than 0.01 but less than 0.10 of the overall probability of failure during the item operating time.

d. Level D - Remote. An unlikely probability of occurrence during item operating time interval. Remote probability may be defined as a single failure mode probability of occurrence which is more than 0.001 but less than 0.01 of the overall probability of failure during the item operating time.

e. Level E - Extremely Unlikely. A failure whose probability of occurrence is essentially zero during item operating time interval. Extremely unlikely may be defined as a single failure mode probability of occurrence which is less than 0.001 of the overall probability of failure during the item operating time.

3.2 Quantitative approach. The failure rate data source used for the quantitative approach shall be the same as that used for the other reliability and maintainability analyses required by contract. When other analyses are not required by contract or a failure rate data source has not been specified by the procuring activity, failure rates and failure rate adjustment factors (e.g., environmental and quality π-factors) shall be derived as follows:

a. MIL-HDBK-217 shall be the primary source of failure rate data for electronic parts. Both the base failure rate and all failure rate adjustment factors shall be identified.

b. When parts are similar to those listed in MIL-HDBK-217, base failure rates shall be selected from MIL-HDBK-217 and shall include other adjustment factors, such as special quality π-factors, as may be required to modify the MIL-HDBK-217 data for applicability to the particular part.

c. Failure rate data for parts not covered by MIL-HDBK-217 shall be selected from alternative data sources.

3.2.1 CA worksheet. Items in this section and related subsections apply when a quantitative approach has been specified. The calculation of a criticality number or assignment of a probability of occurrence level and its documentation are accomplished by completing the columns of the approved CA worksheet. An example of a CA worksheet format is

shown in Figure 102.1. Completed CA worksheets shall be included in the FMECA report, General Requirements, 4.5, following the FMEA worksheet for the same indenture level. The following information is the same as given in the FMEA worksheet and shall be transferred to the CA worksheet:

a. Identification number

b. Item/Functional identification

c. Function

d. Failure modes and causes

e. Mission phase/operational mode

f. Severity classification

3.2.1.1 Failure probability/failure rate data source. When failure modes are assessed in terms of probability of occurrence, the failure probability of occurrence level shall be listed. When failure rate data are to be used in the calculation of criticality numbers, the data source of the failure rates used in each calculation shall be listed. When a failure probability is listed, the remaining columns are not required and the next step will be the construction of a criticality matrix (see 4 of Task 102).

3.2.1.2 Failure effect probability (β). The β values are the conditional probability that the failure effect will result in the identified criticality classification, given that the failure mode occurs. The β values represent the analyst's judgment as to the conditional probability the loss will occur and should be quantified in general accordance with the following:

Failure effect	β value
Actual loss	1.00
Probable loss	>0.10 to <1.00
Possible loss	>0 to = 0.10
No effect	0

3.2.1.3 Failure mode ratio (α). The fraction of the part failure rate (λ_p) related to the particular failure mode under consideration shall be evaluated by the analyst and recorded. The failure mode ratio is the probability expressed as a decimal fraction that the part or item will fail in the identified mode. If all potential failure modes of a particular part or item are listed, the sum of the α values for that part or item will equal one. Individual failure mode multipliers may be derived from failure rate source data or from test and operational data. If failure mode data are not available, the α values shall represent the analyst's judgement based upon an analysis of the item's functions.

regardless of size shall be folded to approximate

5.1.2.1.1 Unit packaging. Each chamois

3.2.1.4 Part failure rate (λ_p). The part failure rate (λ_p) from the appropriate reliability prediction or as calculated using the procedure described in MIL-HDBK-217, shall be listed. Where appropriate, application factors (π_A), environmental factors (π_E), and other π-factors as may be required shall be applied to the base failure rates (λ_b) obtained from handbooks or other reference material to adjust for differences in operating stresses. Values of π-factors utilized in computing λ_p shall be listed.

3.2.1.5 Operating time (t). The operating time in hours or the number of operating cycles of the item per mission shall be derived from the system definition and listed on the worksheet.

3.2.1.6 Failure mode criticality number (C_m). The value of the failure mode criticality number (C_m) shall be calculated and listed on the worksheet. C_m is the portion of the criticality number for the item due to one of its failure modes under a particular severity classification. For a particular severity classification and operational phase, the Cm for a failure mode may be calculated with the following formula:

$$C_m = \beta\alpha\lambda_p t$$

where:

C_m = Criticality number for failure mode.

β = Conditional probability of mission loss (3.2.1.2 of Task 102).

α = Failure mode ration (3.2.1.3 of Task 102).

λ_p = Part failure rate (3.2.1.4 of Task 102).

t = Duration of applicable mission phase usually express in hours or number of operating cycles (3.2.1.5 of Task 102).

3.2.1.7 Item criticality numbers (C_r). The second criticality number calculation is for the item under analysis. Criticality numbers (C_r) for the items of the system shall be calculated and listed on the worksheet. A criticality number for an item is the number of system failures of a specific type expected due to the item's failure modes. The specific type of system failure is expressed by the severity classification for the item's failure modes. For a particular severity classification and mission phase, the C_r for an item is the sum of the failure mode criticality numbers, C_m, under the severity classification and may also be calculated using the following formula:

$$C_r = \sum_{n-1}^{j} (\beta\alpha\lambda_p t)_n \qquad n = 1,2,3,\ldots j$$

where:

C_r = Criticality number for the item.

n = The failure modes in the items that fall under a particular criticality classification.

j = Last failure mode in the item under the criticality classification.

4. Criticality matrix. The criticality matrix provides a means of identifying and comparing each failure mode to all other failure modes with respect to severity. The matrix is constructed by inserting item or failure mode identification numbers in matrix locations representing the severity classification category and either the probability of occurrence level or the criticality number (C_r) for the item's failure modes. The resulting matrix display shows the distribution of criticality of item failure modes and provides a tool for assigning corrective action priorities. As shown in Figure 102.2, the further along the diagonal line from the origin the failure mode is recorded, the greater the criticality and the more urgent the need for implementing corrective action. The example criticality matrix in Figure 102.2 was constructed to show how either the criticality number (C_r) or probability of occurrence level can be used for the vertical axis. The completed criticality matrix shall be included in the FMECA report, General Requirements, 4.5.

5. Ordering data. The following details shall be specified in the appropriate contractual documents:

a. Task 101 (see 1.1 of Task 102).

b. Analysis approach (see 3 of Task 102).

c. Failure rate data source(s) (see 3.2 of Task 102) if quantitative approach is specified.

CRITICALITY ANALYSIS

SYSTEM _____

INDENTURE LEVEL _____

REFERENCE DRAWING _____

MISSION _____

DATE _____

SHEET ____ OF _____

COMPILED BY _____

APPROVED BY _____

IDENTIFICATION NUMBER	ITEM/FUNCTIONAL IDENTIFICATION (NOMENCLATURE)	FUNCTION	FAILURE MODES AND CAUSES	MISSION PHASE/ OPERATIONAL MODE	SEVERITY CLASS.	FAILURE PROBABILITY / FAILURE RATE DATA SOURCE	FAILURE EFFECT PROBABILITY (β)	FAILURE MODE RATIO (α)	FAILURE RATE (λ_p)	OPERATING TIME (t)	FAILURE MODE CRIT # $C_m = \beta\alpha\lambda_p t$	ITEM CRIT # $C_r = \Sigma(C_m)$	REMARKS

Figure 102.1 Example of CA worksheet format

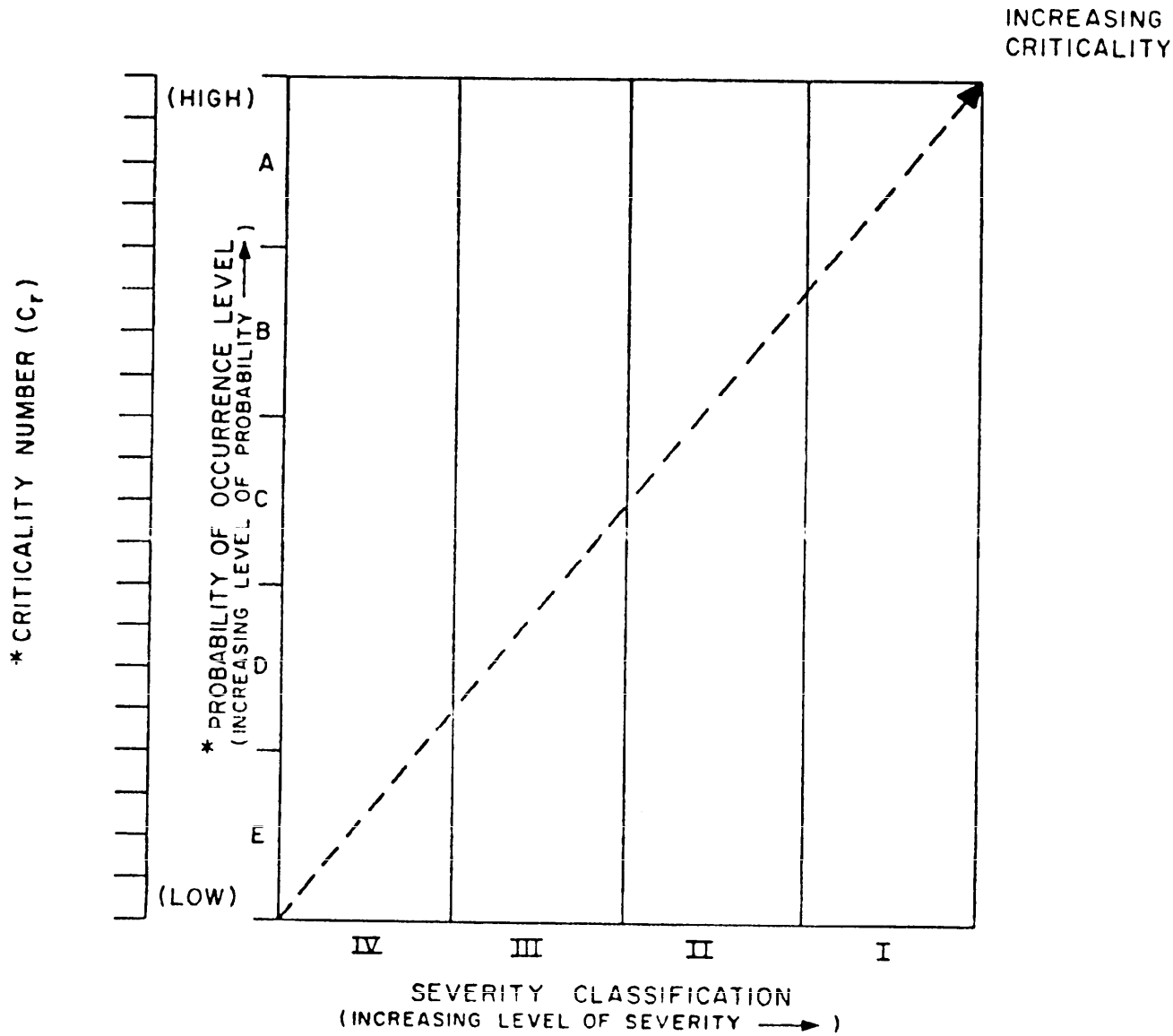

* NOTE: BOTH CRITICALITY NUMBER (C_r) AND PROBABILITY OF OCCURRENCE LEVEL ARE SHOWN FOR CONVENIENCE.

Figure 102.2 Example of criticality matrix

TASK 102

24 November 1980

TASK 103

FMECA-MAINTAINABILITY INFORMATION

1. Purpose. The purpose of the FMECA-maintainability information analysis is to provide early criteria for maintenance planning analysis (MPA), logistics support analysis (LSA), test planning, inspection and checkout requirements, and to identify maintainability design features requiring corrective action.

1.1 Application. The FMECA-maintainability information analysis, Task 103, supplements the FMEA, Task 101, and shall not be imposed without imposition of Task 101.

1.2 Planning. Planning for the FMECA-maintainability information analysis includes the contractor's procedures for assuring the coincident use of this analysis when logistic support analysis in accordance with MIL-STD-1388 and the maintenance planning analysis in accordance with MIL-STD-2080 are required by contract.

2. Documents referenced in Task 103:

STANDARDS

Military

MIL-STD-2080	Maintenance Plan Analysis for Aircraft and Ground Support Equipments

3. FMECA-maintainability information worksheet. Documentation of the maintainability information is accomplished by completing the approved FMECA-maintainability information worksheet. An example of an FMECA-maintainability worksheet format is shown in Figure 103.1. Completed worksheets shall be included in the FMECA report, General Requirements, 4.5, following the FMEA worksheet for the same indenture level. The following information is the same as that given in the FMEA worksheet and shall be transferred to the FMECA-maintainability information worksheet:

a. Identification number

b. Item/functional identification

c. Function

d. Failure modes and causes

e. Failure effects (local, next higher level, end)

f. Severity classification

3.1 Failure predictability. Enter information on known incipient failure indicators (e.g., operational performance variations) which are peculiar to the item failure trends and permit predicting failures in advance. When a failure is predictable in advance, describe the data that must be collected, how it will be used to predict failure, and identify any tests or inspections that may be accomplished to detect evidence of conditions which could cause the failure mode.

3.2 Failure detection means. Identify how each failure mode will be detected by the organizational level maintenance technician and to what indenture level they will be localized. Describe the method by which ambiguities are resolved when more than one failure mode causes the same failure indication. Describe any monitoring or warning device that will provide an indication of impending failure and any planned tests or inspections which could detect occurrence of the failure mode. Identify to what indenture level failures can be isolated by the use of built-in-test features and indicate when ancillary test equipment will be required for fault isolation.

3.3 Basic maintenance actions. Describe the basic actions which, in the analyst's judgement, must be taken by the maintenance technician to correct the failure. Identify the special design provisions for modular replacement and the probable adjustment and calibration requirements following repair.

3.4 Remarks. Any pertinent remarks pertaining to and clarifying any other columns shall be noted. Notes regarding recommendations for design improvement shall be recorded and further amplified in the FMECA report, General Requirements, 4.5.

4. Ordering data. The following details shall be specified in the appropriate contractual documents:

a. Task 101 (see 1.1 of Task 103).

b. Logistic support analysis (See 1.2 of Task 103).

c. Maintenance planning analysis (see 1.2 of Task 103).

FAILURE MODE EFFECTS AND CRITICALITY ANALYSIS
MAINTAINABILITY INFORMATION

SYSTEM _____
INDENTURE LEVEL _____
REFERENCE DRAWING _____
MISSION _____

DATE _____
SHEET _____ OF _____
COMPILED BY _____
APPROVED BY _____

IDENTIFICATION NUMBER	ITEM/FUNCTIONAL IDENTIFICATION (NOMENCLATURE)	FUNCTION	FAILURE MODES AND CAUSES	FAILURE EFFECTS			SEVERITY CLASS.	FAILURE PREDICTABILITY	FAILURE DETECTION MEANS	BASIC MAINTENANCE ACTIONS	REMARKS
				LOCAL EFFECTS	NEXT HIGHER LEVEL	END EFFECTS					

Figure 103.1 Example of FMECA-maintainability information worksheet format

TASK 104

DAMAGE MODE AND EFFECTS ANALYSIS

1. Purpose. The purpose of the damage mode and effects analysis (DMEA) is to provide early criteria for survivability and vulnerability assessments. The DMEA provides data related to damage caused by specified threat mechanisms and the effects on weapon system operation and mission essential functions.

1.2 Application. The DMEA, Task 104, utilizes the results of Task 101, and shall not be imposed without imposition of Task 101.

1.3 Planning. Planning the DMEA includes the contractor's procedures for assuring the timeliness of the analysis and its utilization in the vulnerability assessments of the weapon system.

2. Analysis approach. The DMEA is an expansion of the FMEA to include the generation of data required for vulnerability assessments. It is primarily applicable to new weapon system acquisitions but may be applied to developed (existing) weapon systems where data is required to provide criteria for a survivability enhancement program.

2.1 New weapon systems. The DMEA is an expansion of the FMEA conducted and maintained for the weapon system design during conceptual, validation, and full scale development. The DMEA shall consider all failure modes and damage modes that can occur to each item and the effect each has on the weapon system. The relationship between the weapon system essential functions, mission capabilities, hostile threat capabilities, and hostile weapon effects shall be analyzed to provide design criteria for survivability enhancement.

2.2 Developed weapon systems. When specified, a DMEA is conducted to identify all subsystems and components in a developed (existing) weapon system to the level defined by the procuring agency. The DMEA is used to provide data related to the impact of Engineering Change Proposals (ECPs) and retrofit programs on total weapon system survivability. Threats should be periodically assessed to determine if the weapon system is still capable of operating effectively in a hostile environment.

3. Procedure. The FMEA shall be expanded to provide data related to the damage caused by threat mechanisms and the effects upon weapon system operation and mission essential functions. The damage mode(s) for each essential component as caused by the specified threat mechanism(s) shall be identified and the effect on the essential function(s) of the weapon system determined. The analysis shall include

all identified operation and mission essential subsystems and components. The type of damage mode that each component can experience (i.e., fire, explosion, engine fuel ingestion, toxic fumes, smoke-corrosive materials, etc.) and the primary and secondary damage effects to which each component can be exposed shall be identified. Each nonessential component also shall be examined to determine if a hazardous environment may be created by its sustaining the type or level of damage identified. This shall also include any cascading effect on other subsystems from an initial system or component response. The essential components that may be exposed to the hazardous environments shall be identified.

3.1 Weapon system operation and mission essential functions. The requirements for weapon system operation and mission essential functions shall be determined for each mission phase and included in the functional narrative developed in 4. of Task 101. The weapon system operation and mission essential functions shall be established down to the indenture level that individual subsystems and major components required to perform the function can be identified.

3.2 Identification of critical components. Using the system schematic or functional block diagram, the assigned severity codes, and the established weapon system operation and mission essential functions, each subsystem and major component required to perform each mission essential function shall be identified. The reliability block diagram shall be used to identify subsystem and function redundancies. A critical components listing shall be included with the functional narrative and with the DMEA worksheets in the FMECA report, General Requirements, 4.5.

4. DMEA worksheet. Documentation of the DMEA is accomplished by completing the columns of the approved DMEA worksheet. An example of a DMEA worksheet format is shown in Figure 104.1. Completed DMEA worksheets shall be included in the FMECA report, General Requirement, 4.5, following the FMEA worksheet for the same indenture level. The following information is the same as given in the FMEA worksheet and shall be transferred to the DMEA worksheet:

a. Identification number

b. Item/functional identification

c. Function

d. Failure modes and causes

e. Mission phase/operational mode

f. Severity classification

4.1 Damage modes. All possible damage modes which could result from exposure to the specified threat mechanism(s) shall be determined through analysis of each subsystem, component, or part. The analysis shall include both primary and secondary damage effects. Damage modes of individual item functions shall be postulated on the basis of the stated mission requirements, specified threats, and system descriptions. The effects of the possible damage mode shall include performance degradation as well as total item failure. To assist in assuring that a complete damage mode analysis is performed, each damage mode and function shall, as a minimum, be examined in relation to the following typical damage conditions.

a. Penetration

b. Severed

c. Shattered, cracked

d. Jammed

e. Deformed

f. Ignited, detonated

g. Burned out (i.e., electrical overload)

h. Burn through (i.e., threat caused fires)

4.2 Damage effects. The consequences of each assumed damage mode on item operation, function or status shall be identified, evaluated, and recorded. Damage effects shall focus on the specific block diagram element which is effected by the damage condition under consideration. The damage mode under consideration may impact several indenture levels in addition to the indenture level under analysis; therefore, "local," "next higher level," and "end" effects shall be evaluated.

4.2.1 Local effects. Local effects concentrate specifically on the impact an assumed damage mode has on the operation and function of the item in the indenture level under consideration. The consequences of each postulated damage mode affecting the item shall be described along with any second-order effects which results. Potential conditions where the damage of one item results in a conditional failure probability or effect of a second item which differs from the failure probability or effect when the second item is considered independently shall be identified. The purpose of defining local effects is to provide a basis for evaluating compensating provisions and for recommending survivability enhancement. It is possible for the "local" effect to be the damage mode itself.

4.2.2 Next higher level. Next higher level effects concentrate on the impact an assumed damage mode has on the operation and function of the items in the next higher indenture level above the indenture level under consideration. The consequences of each postulated damage mode affecting the next higher indenture level shall be described.

4.2.3 End effects. End effects evaluate and define the total effect an assumed damage mode has on the operation, function, or status of the uppermost system. The effect of each damage mode upon the essential function(s) affecting weapon system operating capability and mission completion capability shall be determined. The end effect described may be the result of a double failure. For example, failure of a safety device may result in a catastrophic end effect only in the event that both the prime function goes beyond limit for which the safety device is set and the safety device fails. Those end effects resulting from a double failure shall be indicated on the DMEA worksheets.

4.3 Remarks. Any pertinent remarks pertaining to and clarifying any other column in the worksheet line shall be noted. Notes regarding recommendations for design improvement shall be recorded and further amplified in the FMECA report, General Requirements, 4.5. This entry also may include a notation of unusual conditions, damage effects of redundant items, recognition of particularly critical design features or any other remarks that amplify the line entry. Information shall be provided that reasonable actions and considerations are or have been accomplished to enhance survivability through recommended design changes. Information provided shall address the following:

a. Design. Those features of the design that relate to the identified damage mode that minimize the vulnerability with respect to the specified threat mechanisms; i.e., redundancy, separation of components, lines, and structure, elimination of fire paths, integral armor, etc.

b. Test. Those tests recommended to verify the design features recommended or incorporated for survivability enhancement.

c. History. Identification of previous testing and analysis relating to this particular case which will be used to support the validity.

5. Ordering data. The following details shall be specified in the appropriate contractual documents:

a. Task 101 (see 1.2 of Task 104).

b. Threat mechanisms (see 3. of Task 104).

DAMAGE MODE AND EFFECTS ANALYSIS

SYSTEM _____

INDENTURE LEVEL _____

REFERENCE DRAWING _____

MISSION _____

DATE _____

SHEET _____ OF _____

COMPILED BY _____

APPROVED BY _____

IDENTIFICATION NUMBER	ITEM/FUNCTIONAL IDENTIFICATION (NOMENCLATURE)	FUNCTION	FAILURE MODES AND CAUSES	MISSION PHASE/ OPERATIONAL MODE	SEVERITY CLASS.	DAMAGE MODE	DAMAGE EFFECTS			REMARKS
							LOCAL EFFECTS	NEXT HIGHER LEVEL	END EFFECTS	

Figure 104.1 Example of damage mode and effects analysis format

TASK 105

FAILURE MODE, EFFECTS, AND CRITICALITY ANALYSIS PLAN

1. Purpose. The purpose of the FMECA plan is to document the contractor's planned activities implementing the Failure Mode, Effects, and Criticality Analysis Tasks.

1.1 Interrelationship. The FMECA plan shall not be required unless Task 101 is required.

1.2 Application. This plan is used to evaluate planned FMECA Task efforts by a contractor prior to plan approval. When approved by the procuring activity, the plan is used for monitoring and evaluating contractor implementation of the FMECA tasks. When a Reliability Program Plan, as a selected task from MIL-STD-785, has been proposed by the procuring activity, the requirements of this Task shall be satisfied by incorporating the FMECA plan in the Reliability Program Plan.

2. Documents referenced in Task 105:

STANDARDS

Military

MIL-STD-470	Maintainability, Human Factors and Safety
MIL-STD-780	Work Unit Codes for Aeronautical Equipment; Uniform Numbering System
MIL-STD-785	Reliability Program for Systems and Equipment Development and Production
MIL-STD-1388	Logistics Support Analysis
MIL-STD-1591	On Aircraft, Fault Diagnosis, Subsystems, Analysis/Synthesis of
MIL-STD-2072	Survivability, Aircraft; Establishment and Conduct of Programs for
MIL-STD-2080	Maintenance Plan Analysis for Aircraft and Ground Support Equipments

HANDBOOKS

Military

MIL-HDBK-217	Reliability Prediction of Electronic Equipment

3. Content. The FMECA plan shall describe the contractor's procedures for implementing the specified requirements of this standard updating the FMECA to reflect design changes, and use of the analysis results to provide design guidance. Sample worksheet formats, ground rules, analysis assumptions, identification of the lowest indenture level of analysis, coding system description, failure definitions, and identification of coincident use of the FMECA by the contractor's reliability organization and other organization elements shall be included in the plan.

3.1 Worksheet formats. The contractor's formats, which organize and document the FMECA and other analysis methods contained herein, shall include the information shown in the example formats in Figures 101.3, 102.1, 103.1, 104.1. The initial indenture level of analysis shall be identified (item name) on each worksheet, and each successive indenture level shall be documented on a separate worksheet or group of worksheets. A sample of the contractor's worksheet formats shall be included with the FMECA plan.

3.2 Ground rules and assumptions. The contractor shall develop ground rules and analysis assumptions and include them in the FMECA plan. The ground rules shall identify the FMECA approach (e.g., hardware, functional, or combination), the lowest indenture level to be analyzed, and include general statements of what constitutes a failure of the item in terms of performance criteria and allowable limits. Every effort should be made to identify and record all ground rules and analysis assumptions prior to initiation of the analysis; however, ground rules and analysis assumptions may be added for any item if requirements change. Additional ground rules and analysis assumptions shall be documented and separately identified for inclusion in the FMECA report.

3.3 Indenture level. The indenture level applies to the system hardware or functional level at which failures are postulated. Unless otherwise specified, the contractor shall establish the lowest indenture level of analysis using the following guidelines:

a. The lowest level specified in the LSA candidate list to assure complete inputs for each LSA candidate.

b. The lowest indenture level at which items are assigned a catastrophic (Category I) or critical (Category II) severity classification category (see 4.4.3).

c. The specified or intended maintenance and repair level for items assigned a marginal (Category III) or minor (Category IV) severity classification category (See 4.4.3).

3.4 Coding system. For consistent identification of system functions and equipment and for tracking failure modes, the contractor shall adhere to a coding system based upon the hardware breakdown structure, work unit code numbering system of MIL-STD-780, or other similar uniform numbering system. The coding system shall be consistent with the reliability and functional block diagram numbering system to provide complete visibility of each failure mode and its relationship to the system. The contractor shall describe the coding system to be used in the FMECA plan.

3.5 Failure definition. The contractor shall develop general statements of what constitutes a failure of the item in terms of performance parameters and allowable limits for each specific output. Failure definitions shall be included in the ground rules submitted with the FMECA plan. The contractor's general statements shall not conflict with any failure definitions specified by the procuring activity.

3.6 Coordination of effort. The coincident performance and use of the FMECA by reliability and other porgram elements shall be identified in the FMECA plan. Consideration shall be given to the requirements to perform and use the FMECA in support of a reliability program in accordance with MIL-STD-785, maintainability program in accordance with MIL-STD-470, survivability and vulnerability program in accordance with MIL-STD-2072, logistics support analysis in accordance with MIL-STD-1388, maintenance plan analysis (MPA) in accordance with MIL-STD-2080, fault diagnosis analysis in general accordance with MIL-STD-1591, and other contractual provisions. The contractor shall identify the program organization responsible for performing the FMECA and show how the FMECA results will be used by other organizational elements to preclude duplication of effort.

3.7 Failure rate data sources. The failure rate data source shall be the same as that used for the other reliability and maintainability analyses required by the contract. MIL-HDBK-217 shall be the primary source of failure rate data for electronic parts. Failure rate data for parts not covered by MIL-HDBK-217 shall be selected from alternative data sources. The failure rate data sources shall be identified in the FMECA plan and shall be approved by the procuring activity prior to use.

4. Ordering data. The following details shall be specified in the appropriate contractual documents:

a. Task 101 (See 1.1 of Task 105).

b. Other requirements as necessary for tailoring.

c. DI-R-7086 (FMECA Plan) should be specified when deliverable data is desired in conjunction with this task.

APPENDIX A

APPLICATION AND TAILORING GUIDE

10. GENERAL

10.1 Scope. This appendix provides notes for the guidance of the procuring activity in generating the contractual requirements for a failure mode, effects, and criticality analysis (FMECA).

10.2 Tailoring requirements. Each provision of this standard should be reviewed to determine the extent of applicability. Tailoring of requirements may take the form of deletion, addition, or alteration to the statements in Sections 3 and 4 and any specified tasks to adapt the requirements to specific system characteristics, procuring activity options, contractual structure, or acquisition phase. The tailoring FMECA requirements are specified in the contractual provisions to include input to the statement of work, contract data item list (CDRL), and other contractual means.

10.3 Duplication of effort. It is incumbent upon the procuring activity to review the contractual requirements to avoid duplication of effort between the reliability program and other program efforts such as safety, maintainability, human engineering, test and evaluation, survivability and vulnerability, maintenance planning, and integrated logistics support. Identification of the coincident use of FMECA results by the reliability program and other disciplinary areas is required in the FMECA plan or other appropriate program documentation to avoid duplication of effort by the procuring activity and the contractor.

20. REFERENCED DOCUMENTS (not applicable)

30. DEFINITIONS (not applicable)

40 GENERAL REQUIREMENTS

40.1 Ordering data. The procuring activity shall specify the following:

a. Title, number and date of this standard.

b. Task number(s) required.

c. FMECA plan (Task 105) if required.

d. Indenture level of analysis (4.3.3) required.

e. Steps to be used in the FMECA process (4.4.2).

f. FMECA report (4.5) if required.

40.2 Data item descriptions (DID). The following listed DIDs provide a source of possible data item description and format requirements for required data.

SOURCE	DATA REQUIREMENTS	APPLICABLE DID
Task 105	Failure Mode, Effects and Criticality Analysis (FMECA) Plan	DI-R-7086
General Requirements Section 4-5 and Task 101	Failure Mode, Effects and Criticality Analysis (FMECA) Report	DI-R-7085

50. APPLICATION CRITERIA

50.1 General considerations. This standard has been structured to facilitate the tailoring of FMECA requirements based upon individual program needs. Program variables such as system complexity, funding, and schedule influence the level of detail and timing of the FMECA and must be considered when tailoring the requirements. All programs do not require the same level of detail and all programs should not wait until full scale development to implement the FMECA requirements.

50.1.1 Level of detail. The level of detail applies to the level of indenture at which failures are postulated. The FMECA can be accomplished at various levels of indenture from system to part level depending upon the information available and the needs of the program. The lower the indenture level, the higher the level of detail since more failure modes will be considered. The choice of the level of indenture must be compatible with the program cost and schedule constraints and the system reliability requirements. A less detailed analysis which is available in time to contribute to system reliability is more valuable than a more detailed analysis which is late and makes changes costly and unfeasible. In general, the FMECA should not be performed below the level necessary to identify critical items or to the level required by the LSA candidate list, whichever is lower. The depth and detail of the FMECA effort must be defined in appropriate contractual and program documentation.

50.1.2 Timing. The objective of the FMECA is to support the decision making process. If the analysis fails to provide usable information at or before a project decision point, then it has made no contribution and is untimely. The time-phasing of the FMECA effort is important and should be identified in the FMECA plan to assure that analysis results will be available to support the project decision points during system development. Since program cost and schedule constraints require that available resources be used where they are most cost effective, the earliest possible availability of FMECA results is important so that the impact on cost and schedule can be minimized.

50.1.3 Intended use. The FMECA is potentially one of the most beneficial and productive tasks in a well structured reliability program. Since individual failure modes are listed in an orderly, organized fashion and evaluated, the FMECA serves to verify design integrity, identify and quantify sources of undesirable failure modes, and document the reliability risks. FMECA results can be used to provide the rationale for changes in operating procedures for ameliorating the effects or for detecting the incipience of the undesirable failure modes. Although the FMECA is an essential reliability task, it supplements and supports other engineering tasks through identification of areas in which effort should be concentrated. The FMECA results are not only used to provide design guidance, but they are used advantageously in and for maintenance planning analysis, logistics support analysis, survivability and vulnerability assessments, safety and hazards analyses, and for fault detection and isolation design. This coincident use of the FMECA must be considered in FMECA planning and every endeavor made to prevent duplication of effort by the program elements which utilize FMECA results.

50.2 FMEA (task 101). The FMEA is an essential design evaluation procedure which should not be limited to the phase traditionally thought of as the design phase. The initial FMEA should be done early in the conceptual phase when design criteria, mission requirements, and conceptual designs are being developed to evaluate the design approach and to compare the benefits of competing design configurations. The FMEA will provide quick visibility of the more obvious failure modes and identify potential single failure points, some of which can be eliminated with minimal design effort. As the mission and design definitions become more refined, the FMEA can be expanded to successively more detailed levels. When changes are made in system design to remove or reduce the impact of the identified failure modes, the FMEA must be repeated for the redesigned portions to ensure that all predictable failure modes in the new design are considered.

50.3 CA (task 102). The CA is a procedure for associating failure probabilities with each failure mode. Since the CA supplements the FMEA and is dependent upon information developed in that analysis, it should not be imposed without imposition of the FMEA. The CA is probably most valuable for maintenance and logistics support oriented analyses since failure modes which have a high probability of occurrence (high criticality numbers) require investigation to identify changes which will reduce the potential impact on the maintenance and logistic support requirements for the system. Since the criticality numbers are established based upon subjective judgments, they should only be used as indicators of relative priorities.

50.4 FMECA-maintainability information (task 103). The FMECA-maintainability information analysis is utilized to provide early design criteria for test methods, accessibility, and repairability for the item being analyzed. This analysis is an extension of the FMEA and is dependent upon FMEA generated information; therefore, the FMECA-maintainability information analyses should not be imposed without imposition of the FMEA. The identification of how each failure will be detected and localized by the operational level maintenance technician will provide information for evaluating the effectiveness of built-in-test. Descriptions of the basic organizational level maintenance actions required for failure localization and correction will identify potential accessibility problems permitting early design correction. The failure mode listing which is included on the completed worksheets should be utilized to provide this required data for both the maintenance plan and logistics support analyses.

50.5 DMEA (task 104). The DMEA provides essential inputs for the vulnerability assessment of a weapon system to aid in the identification of deficiencies and the evaluation of designs for enhancing survivability. Since the DMEA utilizes the failure mode information from the FMEA, it should not be imposed without imposition of the FMEA. The DMEA, like the initial FMEA, should be done early in the conceptual phase to provide data related to the capability of the conceptual weapon system design to survive the effects of the specified hostile threats. Development of this data before weapon system design configuration is finalized will provide significant survivability benefits with minimal impact on cost and schedule.

50.6 Criticality number (C_r) calculation example. Calculation of meaningful criticality numbers requires the use of specific failure rate and part configuration data. When part configurations are known, failure rate data can be obtained from the appropriate reliability prediction, field data from past systems of similar design and environmental use, or failure rate data sources such as MIL-HDBK-217. With known failure rates, the criticality number for an item is the number of failures of a specific type expected per million hours due to the item's failure modes under a particular severity classification as discussed in Task 101. A failure mode criticality number, C_m, for a particular severity classification is given by the expression:

$$C_m = \beta\alpha\lambda_p t \qquad (1)$$

The item criticality number, C_r, under a particular severity classification, is then calculated by summing the Cm for each failure mode under that severity classification. This summation is given by the expressions:

$$C_r = \sum_{n=1}^{j} (C_m)_n \quad \text{or}$$

$$C_r = \sum_{n=1}^{j} \beta\alpha\lambda_p t \times 10^6)_n \quad n = 1,2,3,\ldots j \qquad (2)$$

Where:

C_r = Criticality number for the item.

C_m = Criticality number for a failure mode under a particular severity classification (see 4.4.3).

β = Conditional probability of mission loss given that the failure mode has occurred.

α = Failure mode ratio. The probability, expressed as a decimal fraction, that the part or item will fail in the identified mode.

λ_p = Part failure rate.

It should be noted that failure rates are usually defined in terms of failures per million hours ($f \times 10^{-6}$) and, for simplification purposes, equation (1) may be multiplied by a factor of 10^6 to eliminate an unnecessary degree of arithmetic precision in worksheet entries. That is, it is easier to enter criticality number on the worksheets as 1.08 than to enter 1.08×10^{-6} or 0.00000108. The importance of the criticality number is in providing a relative ranking of the failures or failure modes and not in the absolute value of the numeric.

For example, the calculations for C_m and C_r for a given mission phase under severity classification Category II is as follows:

Given: Base failure rate

λ_b = 0.10 failures per million hours = (0.10×10^{-6})

Solve for λ_p using typical part failure rate model from MIL-HDBK-217.

$$\lambda_p = \lambda_b (\pi_A \times \pi_E \times \pi_Q)$$

$$\pi_A = 1.5; \ \pi_E = 40; \ \pi_Q = 1.2$$

$$\lambda_p = 0.10 \times 10^{-6} (1.5 \times 40 \times 1.2)$$

$$\lambda_p = 7.2 \times 10^{-6}$$

For a specific mission phase there are two (2) failure modes under severity classification Category II and one (1) failure mode severity classification Category IV.

α_1 = 0.3 for first failure mode under severity classification Category II.

α_2 = 0.2 for second failure mode under severity classification Category II.

$\alpha_3 = 0.5$ for failure mode under severity classification Category IV.

Find: C_m and C_r for the mission phase under severity classification Category II.

Let $\beta = 0.5$ and $t = 1.0$ hour for the mission phase.

For α_1: $C_m = (\beta\alpha_1\lambda_p t \times 10^6) = (0.5 \times 0.3)\ (7.2 \times 10^{-6})\ (1) \times 10^6$

$C_m = 1.08$

For α_2: $C_m = \beta\alpha_2\lambda_p t \times 10^6) = (0.5 \times 0.2)\ (7.2 \times 10^{-6})\ (1) \times 10^6$

$C_m = 0.72$

Then:

$$C_r = \sum_{n=1}^{j} (C_m)_n$$

$$C_r = \sum_{n=1}^{2} (C_m)_n = 1.08 + 0.72 = 1.80$$

or

$$C_r = \sum_{n=1}^{j} (\beta\alpha\lambda_p t \times 10^6)_n = \sum_{n=1}^{2} (\beta\alpha\lambda_p t \times 10^6)$$

$$C_r = (\beta\alpha_1\lambda_p t \times 10^6) + (\beta\alpha_2\lambda_p t \times 10^6)$$

$$C_r = (0.5 \times 7.2 \times 10^{-6} \times 1)\ (0.3 + 0.2) \times 10^6$$

$$C_r = (3.6 \times 10^{-6})\ (0.5) \times 10^6$$

$C_r = 1.80$ under severity classification Category II.

INSTRUCTIONS: In a continuing effort to make our standardization documents better, the DoD provides this form for use in submitting comments and suggestions for improvements. All users of military standardization documents are invited to provide suggestions. This form may be detached, folded along the lines indicated, taped along the loose edge *(DO NOT STAPLE)*, and mailed. In block 5, be as specific as possible about particular problem areas such as wording which required interpretation, was too rigid, restrictive, loose, ambiguous, or was incompatible, and give proposed wording changes which would alleviate the problems. Enter in block 6 any remarks not related to a specific paragraph of the document. If block 7 is filled out, an acknowledgement will be mailed to you within 30 days to let you know that your comments were received and are being considered.

NOTE: This form may not be used to request copies of documents, nor to request waivers, deviations, or clarification of specification requirements on current contracts. Comments submitted on this form do not constitute or imply authorization to waive any portion of the referenced document*(s)* or to amend contractual requirements.

(Fold along this line)

(Fold along this line)

DEPARTMENT OF THE NAVY
Commanding Officer
Naval Air Engineering Center
Systems Engineering Standardization Department
(SESD), Code 93
Lakehurst, NJ 08733

OFFICIAL BUSINESS
PENALTY FOR PRIVATE USE $300

NO POSTAGE NECESSARY IF MAILED IN THE UNITED STATES

BUSINESS REPLY MAIL
FIRST CLASS PERMIT NO. 12503 WASHINGTON D C

POSTAGE WILL BE PAID BY THE DEPARTMENT OF THE NAVY

Commanding Officer
Naval Air Engineering Center
Systems Engineering Standardization Department
(SESD). Code 93
Lakehurst, NJ 08733

ATTN: TJM (9322)

STANDARDIZATION DOCUMENT IMPROVEMENT PROPOSAL

(See Instructions – Reverse Side)

1. DOCUMENT NUMBER	2. DOCUMENT TITLE

3a. NAME OF SUBMITTING ORGANIZATION	4. TYPE OF ORGANIZATION *(Mark one)*
b. ADDRESS *(Street, City, State, ZIP Code)*	☐ VENDOR ☐ USER ☐ MANUFACTURER ☐ OTHER *(Specify)*:

5. PROBLEM AREAS

a. Paragraph Number and Wording:

b. Recommended Wording:

c. Reason/Rationale for Recommendation:

6. REMARKS

7a. NAME OF SUBMITTER *(Last, First, MI)* – Optional	b. WORK TELEPHONE NUMBER *(Include Area Code)* – Optional
c. MAILING ADDRESS *(Street, City, State, ZIP Code)* – Optional	8. DATE OF SUBMISSION *(YYMMDD)*

DD FORM 82 MAR 1426

PREVIOUS EDITION IS OBSOLETE.