Neutral Wind Meter (NWM)
and
Ion Velocity Meter (IVM)

Coupled Ion-Neutral Dynamics Investigation (CINDI)
Critical Design Review

November 28, 2001
UTD

AGENDA

PROGRAM MANAGEMENT

PROJECT ORGANIZATION

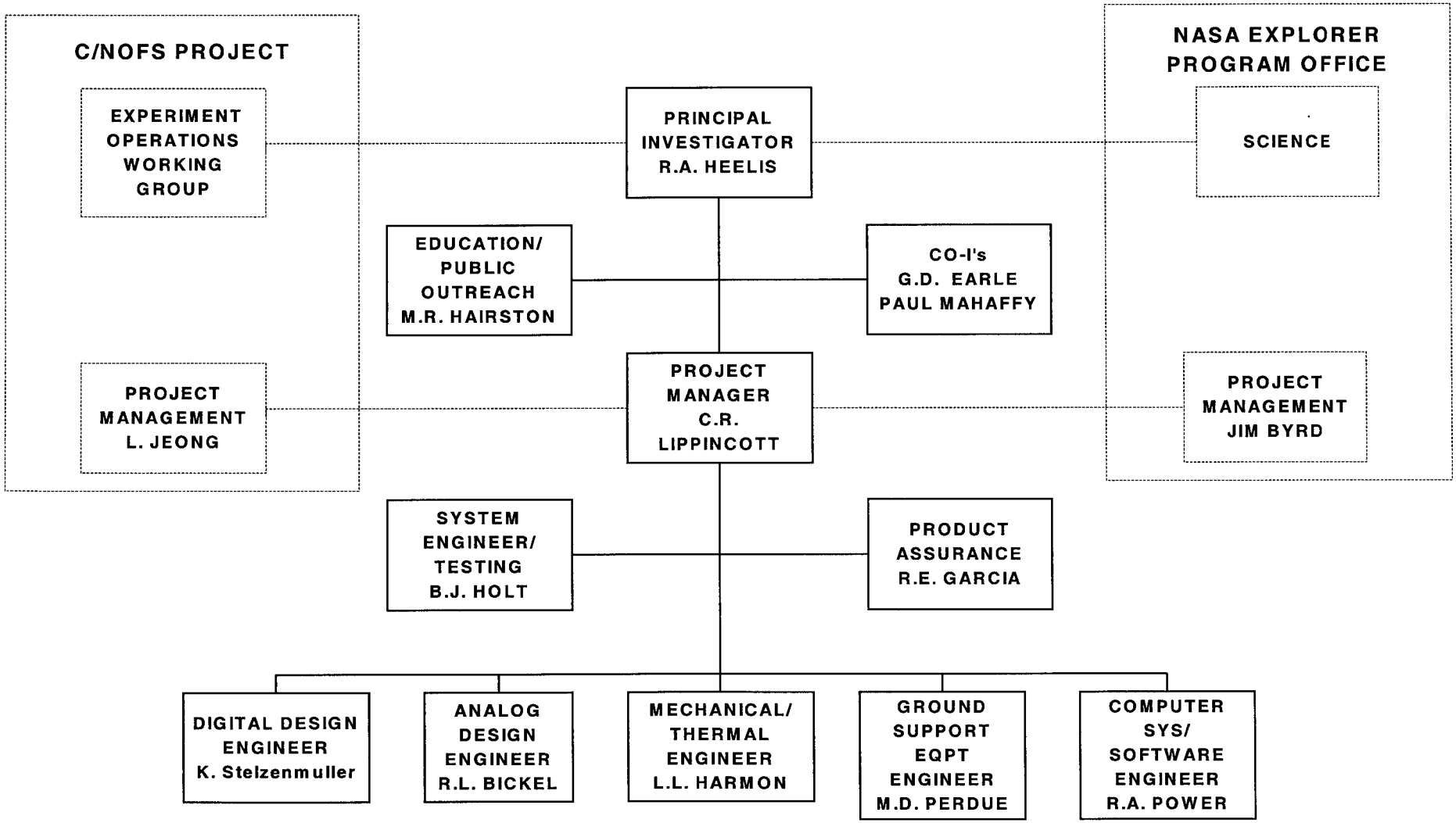

CONTACT INFORMATION

Name	Organization	Phone Number	Email Address
R.A. Heelis (Rod)	UTD	(972) 883-2822	heelis@utdallas.edu
G.D. Earle (Greg)	UTD	(972) 883-6828	earle@utdallas.edu
C.R. Lippincott (Ron)	UTD	(972) 883-2819	lippinco@utdallas.edu
B.J. Holt (Ben)	UTD	(972) 883-2821	holt1@airmail.net
L.L. Harmon (Larry)	UTD	(972) 883-2823	harmon@utdallas.edu
Joseph Bolek	NASA/GSFC	(301) 286-1390	joseph.t.bolek@gsfc.nasa.gov
Jim Byrd	NASA/GSFC	(301) 286-7622	jim.byrd@gsfc.nasa.gov
Bill Davis	NASA/GSFC	(301) 286-3038	bdavis@pop400.gsfc.nasa.gov
Robert Davis	Aerospace/AFRL	(505) 872-6235	robert.j.davis@aero.org
Bronek Dichter	AFRL	(781) 377-3991	bronek.dichter@hanscom.af.mil
Laila Jeong	AFRL	(781) 377-3671	laila.jeong@hanscom.af.mil

Mailing Address:	**Physical Address**:
The University of Texas at Dallas FO22 POB 830688 Richardson, TX 75083-0688	The University of Texas at Dallas 2601 N. Floyd Road Richardson, TX 75080 **FAX**: (972) 883-2761

The CINDI Project

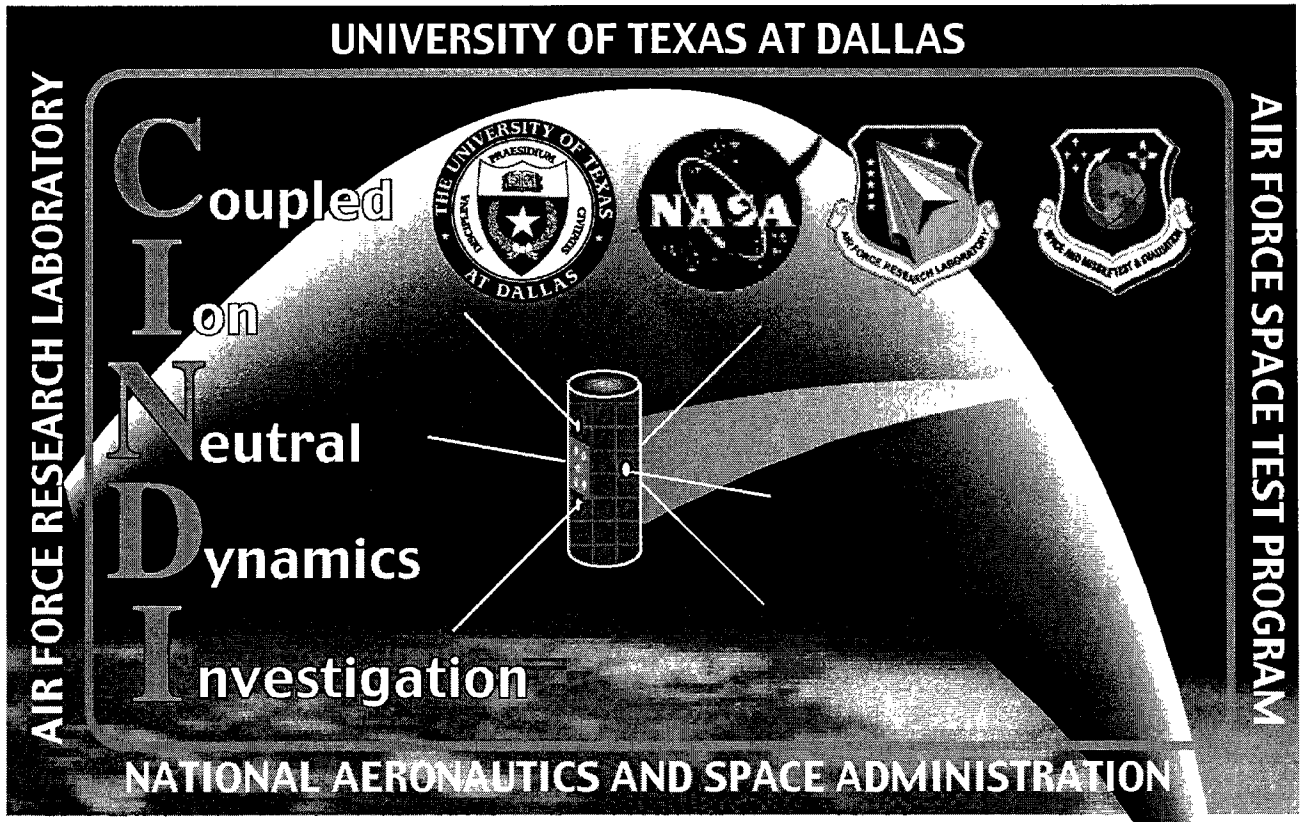

- Make key measurements to determine the links between ion and neutral motions.
- Use knowledge of physical links to forecast onset of equatorial ionospheric structure

Basic Principles

- Earth's upper atmosphere is an anisotropic electrical conductor.
- The Magnetic field provides electrical connectivity between two plasma layers.
- At night the upper layer is unstable to gravitational (heavy over light) overturning.

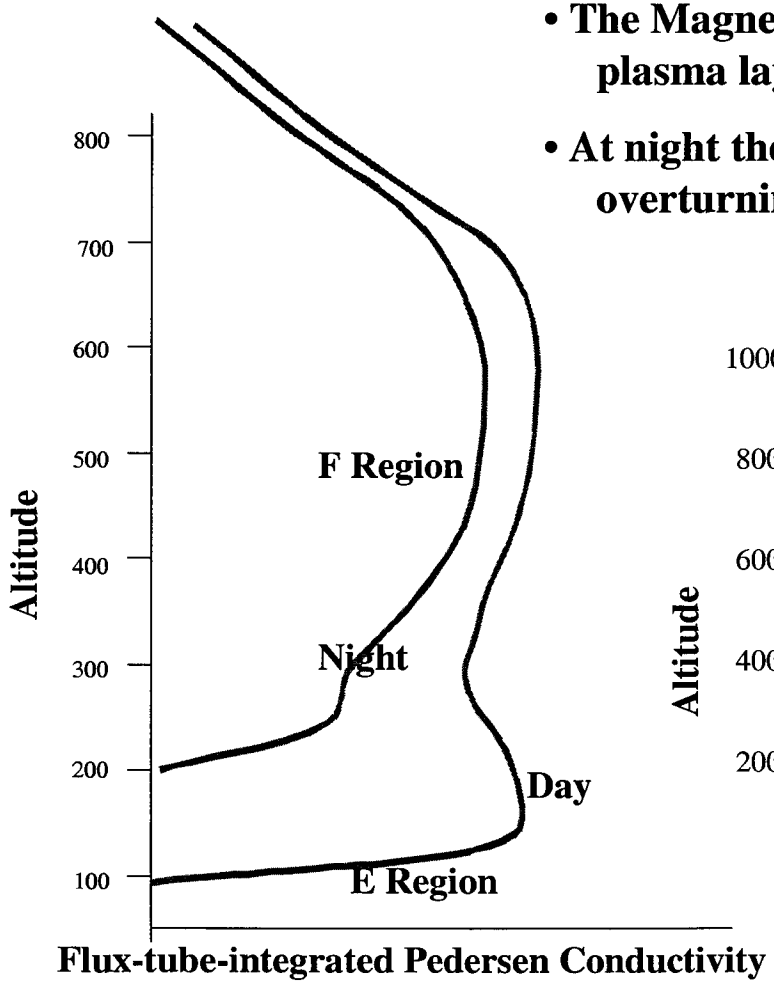

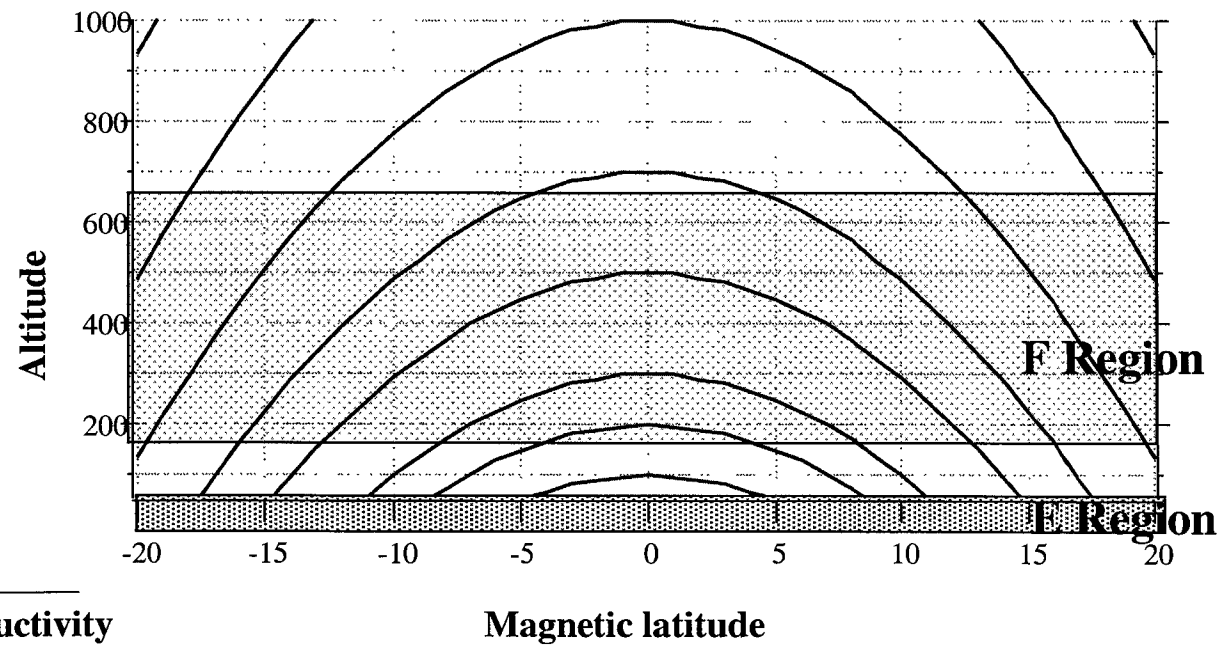

Major Drivers of Plasma Structuring

- **Variations in the seed perturbations**
  Gravity **waves** from weather systems
- **Variations in the height of the density gradient**
  Local-time history of the vertical **ExB drift**
  Magnitude and persistence of local drifts.
  Neutral winds.
- **Variations in the flux-tube integrated conductivity**
  Neutral wind induced field-aligned plasma motions.
  ExB drift history

Major Quests

Key Questions

- **What are the relationships between the behavior of F-region neutral winds and the daily variability of ExB drifts ?**
- **What combination of neutral winds and ion drifts promotes the growth of plasma structure ?**
- **How does the temporal evolution of structure depend on F-region neutral winds and ExB drifts ?**

Required Measurements

- **<u>Total Ion Concentration</u> to identify regions of plasma structure.**
- **<u>Ion Drift Velocity</u> to define evolution of plasma structure.**
- **<u>Neutral Wind Velocity</u> to understand electrodynamics and determine drivers for small-scale structure**

CONTRACT/PROCUREMENT OVERVIEW

- Completed NASA Phase A Review
- Air Force PDR 31 Jul 01
- NASA PDR 28 Aug '01
- Currently in Phase C/D
- Confirmed in Nov '01
- Phases C/D/E funded by NASA
- No major subcontractors

MAJOR MILESTONES

• Air Force PDR	31 Jul 01
• Detailed Schedule with Loaded Resources	21 Aug 01
• NASA PDR	28 Aug 01
• CDR	28 Nov 01
• Detailed Design Complete	Dec 01
• Fabrication	Sep 01 - Mar 02
• Test	Apr 02 - Sept 02
• IVM Delivery to KAFB	Sept 02
• NWM Delivery to KAFB	Oct 02
• Payload Integration	Sept 02 - Jan 03
• Space Vehicle Integration	Feb 03 - Sept 03
• Launch Integration	Sept 03 - Oct 03
• Launch	Oct 03

Schedule Placeholder

DESIGN/DEVELOPMENT STATUS-1

- Final schematic and PWB checkout/drawing sign-off on schedule
- Prototype Digital Controller PWB(IVU) in assembly
  - •FPGA routing successful, ~ 40% of modules used
  - •FPGA timing analysis in progress
- Final Parts and Materials Lists submitted
- NSPAR's submitted – reviewed and approved by GSFC Code 300 parts specialist
- Final Parts Stress/Derating Analysis Complete
- Parts deliveries on schedule

DESIGN/DEVELOPMENT STATUS-2

- Detailed Mechanical Design on schedule
- Final Radiation Analysis Complete
- Final Reliability Analysis Complete
- Detailed Power Estimate/Analysis Complete
- BCE assembly/checkout complete
- GSE Unit #1 assembly/checkout complete - #2 in progress
- GSE Software development on schedule
- PEV and initial Filament Life Tests performed
- AF, NASA PDR and Confirmation Review action items that are under UTD control are closed – all inputs submitted

PEER REVIEW STATUS

- HVPS – Art Ruitberg, GSFC
  - 4 recommended actions implemented (details in "analog circuits")
- Digital Controller – Initial review by Mike McLelland, SwRI
  - Evaluate need for power/gnd plane in high freq areas
  - Check that all outputs are "deglitched"
  - Complete back annotated timing analysis
  - Follow-up review at appropriate time
- Medium Voltage Power Supplies and Filament Controller- Art Ruitberg, review in progress

AF PDR ACTION ITEMS 1

ACTION ITEM	STATUS	CLOSURE ACTION
1. Need information on the mass simulator models; What is the process for developing these models?	CLOSED	AFRL has accepted responsibility for the development and delivery of all instrument mass models
2. Ensure that instrument stimulators used during all phases of SV I&T are compatible within the instrument set.	CLOSED	Ion source in Thermal-Vac chamber eliminated with removal of DIDM instrument. Other payload GSE will be evaluated by the Integration & Test Working Group.
3. Explain thermal testing temperature limits in PVS relative to MRD operating/survival limits and thermal predictions of on-orbit temperature extremes.	CLOSED	PLITP took the place of the PVS and defines proper test temperature limits
4. Ensure that test temperatures for IVM and NWM payload qualification are protoflight temperatures.	CLOSED	PLITP took the place of the PVS and defines proper test temperature limits
5. Iterations on IVM/NWM ICDs need to happen very quickly to ensure ICD is under configuration control by 24 Aug 01, as needed by UTD for NASA PDR. Need payload comments by 8/3/01 to get updated ICD by 8/9/01.	CLOSED	NASA has accepted the C/NOFS program ICD development schedule

AF PDR ACTION ITEMS 2

ACTION ITEM	STATUS	CLOSURE ACTION
6. Need to assess the impacts of the magnetic field (60 mG at 15 cm) generated by the Ram Wind Sensor on surrounding payload and spacecraft elements	CLOSED	TM-86 written to provide approach; Action open until completion date for RWS magnet testing is provided
7. UTD should perform magnetic induction measurements on the RWS as soon as possible in order to characterize the field generated by the internal C-magnet.	CLOSED	Magnetic measurements performed on C-magnet and field characterized.
8. UTD should provide updated EMI/EMC data on internal instrument components as it becomes available from spec sheets, estimation, and/or testing. DC/DC Converter information should be provided by Spacecraft PDR.	CLOSED	Info provided by UTD on 8/23 and forwarded to Spectrum
9. Provide warning to all Instrument Development Teams regarding special thermal design considerations needed for UTDs 1553 chip.		This is not a UTD action item
10. Update IVM and NWM dimensions and mass for new MRD revision	CLOSED	CLOSED per MRD update

AF PDR ACTION ITEMS 3

ACTION ITEM	STATUS	CLOSURE ACTION
11. Provide minimum bend radius information for NWM cables to Spectrum for use in harness layout design.	CLOSED	Minimum bend radius is 4 inches.
12. Consider the need for thermal-vacuum bakeouts of all instrument hardware prior to instrument-level thermal-vac testing of contamination-sensitive sensors (IVM, NWM, DIDM, PLP). Consider the need for thermal-vacuum bakeouts prior to payload module lev		Bake-outs being considered by Guy Robinson as part of comprehensive I&T program.
13. Provide drawings/definition of NWM "safing screw" and alignment mirrors, including mounting information, to Spectrum and AFRL.	CLOSED	8/23: UTD (LH) sent drawing with mirror info.
14. Provide clear requirements for cleanliness / surface deposition of thermal-vac chambers that will host UTD instruments.	CLOSED	Info supplied by UTD (GSFC Thermal Vac personnel).

NASA PDR ACTION ITEMS 1

ACTION ITEM	STATUS	CLOSURE ACTION
1. Mission Office to supply comprehensive EMI/EMC requirements and UTD to incorporate them into their design & test plan.	CLOSED	EMI/EMC requirements are in the S/C to Payload ICD (1169-EI-Y25125). UTD has incorporated them into the design and test plan (CINDI Verification and Validation Plan (UTD139-705)).
2. Consideration should be given to the use of optical coupling where at all possible between the instrument and the GSE.	CLOSED	We considered optical coupling but instead have incorporated a mode into the GSE where the PC and GSE can be powered down and the instrument operated from a rechargeable NiCad battery pack in the GSE. This will allow us to determine if the source of the observed emissions is the instrument under test or something external to the instrument.
3. Consideration should be given to a test of the instrument interfaces with the spacecraft at the earliest possible date.	CLOSED	We plan a 1553 hardware compatibility test at Spectrum Astro (SAI) in mid-Jan 02 using the IVU and the SAI Condor 1553 Test Station containing hardware representative of that used in the CNOFS S/C bus controller and with associated test software. The CINDI GSE software will be available for testing with the IVU in early January 02. AFRL plans to make available to UTD by 1 Feb 02 a laptop computer that emulates the flight software and bus traffic and has a 1553 interface. Since the first digital controller board is scheduled to be assembled starting 26 Feb 02, the above interface tests will have already been completed. The full S/C simulator built by SAI will be available for interface testing at KAFB by 15 April 02.

NASA PDR ACTION ITEMS 2

4. The Mission Office needs to obtain the contamination requirements for the various instruments and generate a comprehensive contamination control plan.	IN PROCESS	UTD input to AFRL has been provided. CNOFS plan in work. UTD working to CNOFS draft plan.
5. The length, routing, and tie-down of the intra-instrument cables needs to be specified in the ICD.	OPEN	These details for the cables will be determined before cable fabrication (15 Mar 02) and placed in the ICD.
6. It is recommended that an instrument cold-start be performed at some reasonable temperature below -10C.	CLOSED	We will demonstrate cold-start capability at -20C.
7. The lead stress and/or component mounting methods need to be evaluated for the RadPacks to insure the mounting of the component will survive the expected loads.	CLOSED	A mechanical analysis was performed and the requirements were satisfied with ample margin.
8. Evaluate the current data available from JPL and GSFC to see if it is applicable to the Interpoint power converters used by CINDI.	CLOSED	Evaluated the subject data and it was not the MCH series used in CINDI. The MCH series parts have radiation tolerance that exceeds the CNOFS requirements including margin.
9. Consider sending the analog and digital schematics for review by a group of independent reviewers.	IN PROCESS	Digital circuits reviewed by Mike McLelland (SwRI), analog circuits without recent flight heritage reviewed/in review by Art Ruitberg (GSFC). In process of working action items.
10. Provide an instrument verification matrix. (Note: GSFC prefers the following order for environmental tests: EMI/EMC, Vibration, and Thermal Vacuum.)	CLOSED	Verification matrix provided and test order and rationale provided.

NASA PDR ACTION ITEMS 3

ACTION ITEM	STATUS	CLOSURE ACTION
11. The spacecraft should consider providing active overcurrent protection to the instruments. Overcurrent protection needs to be specified and reviewed.	CLOSED	The S/C power interface to the instrument was reviewed in splinter session at the S/C PDR with AFRL, Spectrum Astro, and UTD personnel participating. The instrument power will come from a 3 amp solid state switch, and the line will be fused at 3 amps.
12. In the future, all the AF and NASA reviews should be combined into a single review for both parties.	CLOSED	All future AF and NASA will be combined.
13. The schedule needs to show the actual expected delivery date of the FPGA.	CLOSED	FPGAs were delivered to UTD on 11 Sept 01.
14. Investigate a much earlier delivery date for the S/C simulator.	CLOSED	See Item #3 above.
15. The project shall work towards having the ICD sign-off as soon as possible.	CLOSED	ICD's signed by SAI and under configuration control.
16. The specific alignment requirements for the IVM and NWM to the RSAP and the spacecraft reference axes need to be established and placed in the ICD. Provision needs to be made by both parties for the measurement of these alignments in 3-axes.	CLOSED	Alignment requirements are in the S/C to Payload ICD-1169 -EI-Y25125 and the Mission Requirements Document. Measurement will be performed on 2-axes. The third axis will be by analysis.

NASA PDR ACTION ITEMS 4

ACTION ITEM	STATUS	CLOSURE ACTION
17. Provide procurement schedules and purchase specs for multiplier, filaments, and PEV.	CLOSED	Multiplier specification in SCD 200-251, delivery due 30 Nov 01; Filament received 11 Oct 01; Solenoid specification in SCD 200-250, received 8 Nov 01
18. Provide additional details on the design of the PEV and prototype test program. There should be an extended test program of a prototype in a vacuum and over temperature.	CLOSED	Design details and prototype test program of PEV provided. The PEV consists of the solenoid and piece parts built by UTD.
19. Generate the multiplier procurement specification, place the order, and obtain a firm delivery schedule.	CLOSED	See Item #17 above.
20. The entire power input circuit design needs to be defined and evaluated to see if a soft-start circuit is needed.	CLOSED	All power input circuits have been designed and evaluated for soft-start. There is no capacitor directly across the input power lines. A representative set of Interpoint MCH converters has been tested for in-rush current under the predicted instrument load and the results sent to AFRL and Spectrum Astro. The in-rush current is within specification.

NASA CONFIRMATION ACTION ITEMS

1. Request that the USAF baseline the instrument to the S/C ICD.	CLOSED	See Action Item #15 in the NASA PDR list.
2. Accelerate the delivery of the S/C simulator to UTD.	CLOSED	See Action Item #3 in the NASA PDR list.
3. Delete the requirement for a one atmosphere thermal cycle test of the integrated instrument.	CLOSED	One atmosphere thermal cycle testing deleted from instrument test plans. Thermal vacuum will be performed at the instrument level.
4. Add an I & T engineer to the UTD team to aid with logistics, planning, and procedure development.	CLOSED	Have contracted with Southwest Research Institute to provide services in this area.
5. Conduct peer reviews on the HVPS and RWS.	IN PROCESS	See Action Item #9 in the NASA PDR list. Art Ruitberg (GSFC) reviewed the circuits of the RWS. D.Young (UofM) reviewed the RWS science. In process of working action items.
6. Consolidate reviews with USAF, avoid duplication if at all possible.	CLOSED	See Action Item #12 in the NASA PDR list.

CINDI
CONTINUOUS RISK MANAGEMENT PLAN
(CRM)

(CINDI Plan based on GSFC plan)

- Risk Identification
  - Full team participation
  - All project elements and phases
  - Formulate risk statements
- Risk Assessment
- Risk Planning
  - Research
  - Accept
  - Watch
  - Mitigate
- Risk Monitoring
- Risk Handling
  - Control
  - Communication/documentation

CINDI CRM
RISK ASSESSMENT

- Risk Assessment
  - Assess likelihood of occurrence
  - Assess consequence to the project
  - Classify (score) risk

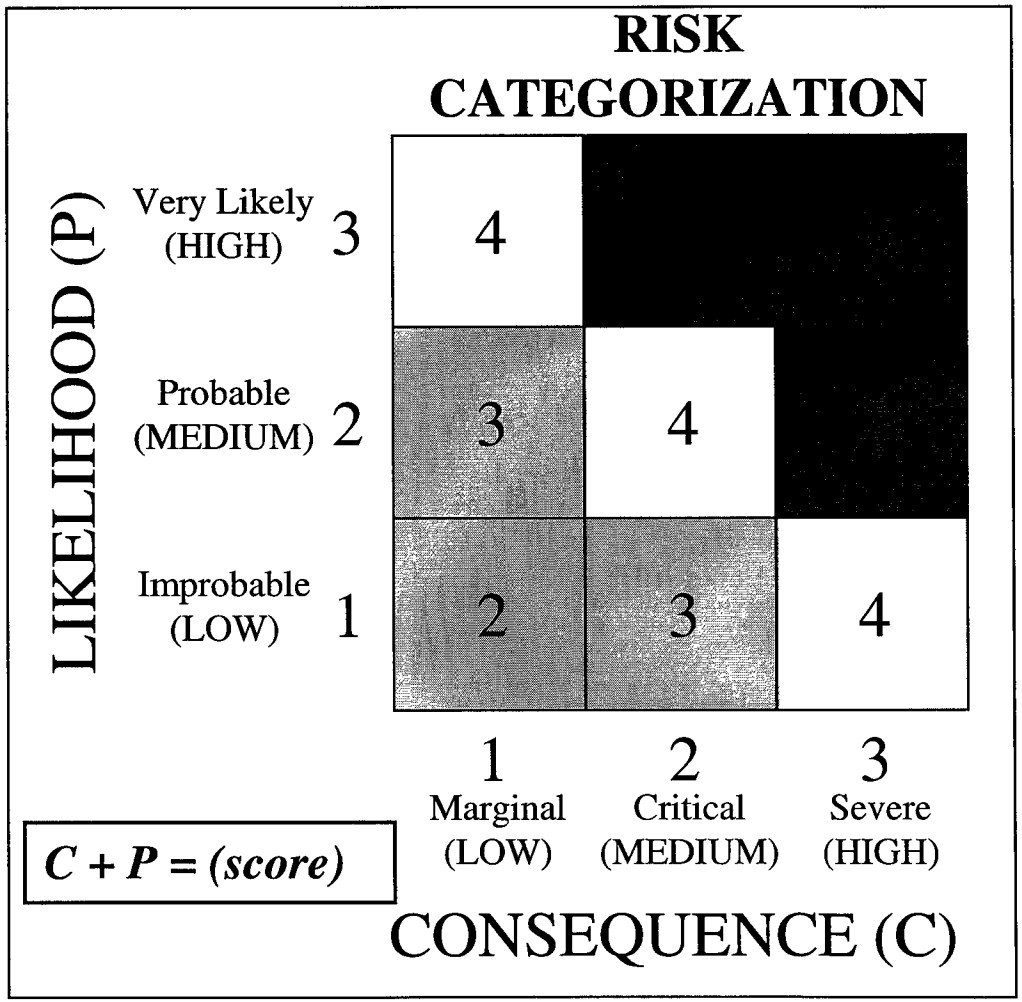

CINDI CRM
RISK MONITORING

- Continuous assessment of risk reduction
- Track mitigation effectiveness
- Ensure risk retirement/acceptable mitigation

CINDI RISK WATCH LIST

RISK NUMBER	RISK NAME	RISK OWNER	RISK DESCRIPTION	MITIGATION PLAN	SCORE		TIME FRAME
					W/O MITIGATION	W/ MITIGATION	

CINDI CRM
RISK HANDLING

- Risk Handling
  - SE is the focal point for technical risk management
  - PM manages schedule and cost risk
  - Risk Management Board (RMB)
    - Meets at least monthly
    - PM, SE, RQA, GSE, Mechanical, Electrical, Science/Software Representatives
  - RMB Actions
    - Continue current mitigation plan
    - Review/revise watch list
    - Re-plan
    - Close risk
    - Invoke a contingency plan

TOP FIVE RISKS

C/NOFS	TOP FIVE RISK LIST				21 NOV 2001		
					SCORE		
Risk Rank	Risk Name	Risk Owner	Risk Description	Mitigation Plan	W/Out Mitigation	With Mitigation	Time Frame
1	Schedule - Assembly or test delays	PM	Problems in assembly or test could cause a schedule slip.	1) Parts problems handled per parts mitigation. 2) Early testing of PEV, etc below. 3) Peer reviews & Design Reviews to firm design 4) Identify problem quickly & elevate priority. 5) Apply internal and external resources. 6) Augment with overtime work	2+2=(4)	2+1=(3)	N.M.F
2	Multiplier failure	SE	Multiplier failure causes loss of RWS data.	1) Use mechanically robust multiplier (implemented) 2) Do early vibration test (in process) 3) Use long lifetime multiplier (implemented). 4) Provide clean vacuum environment during test and flight (implemented) 5) Dry nitrogen backfill during integration / testing (implemented).	2+2=(4)	2+1=(3)	N.M.F
3	Filament failure	SE	Filament failure causes loss RWS or XTRK data	1) Provide redundant filaments (implemented). 2) Use soft start circuit for filament heat (implemented). 3) Current limit filament heat output (implemented). 4) Use long-life material with high efficiency to reduce heat (implemented). 5) Do early performance validation tests (in process). 6) Use minimum required emission current (implemented). 7) Provide filament disable plug for protection during ground test (implemented). 8) Performed extensive filament lifetime analysis (implemented)	2+2=(4)	2+1=(3)	N M
4	PE Valve failure.	SE	PE valve failure results in inability to equalize pressures in NWM sensor pressure chambers	1) Use solenoid design with minimal moving parts (implemented). 2) Spring load to closed position (implemented) . 3) Use dry lubrication on solenoid plunger (implemented) 4) Life test and early vibration test (in process).	2+2=(4)	1+1=(2)	N.M.F
5	Schedule-documentation and review requirements.	PM	NASA documentation and review requirements could overload manpower efforts of key personnel at critical times resulting in a schedule slip.	1) Carefully consider value and impact of added documentation and / or changes to UTD traditional approach in light of required delivery dates (NASA / AF in process). 2) Delay delivery of documentation to the extent permitted (NASA / AF in process). 3) Obtain SwRI assistance (implemented) 4) Hire experienced RQA engineer (implemented). 5) Develop resource loaded schedule (implemented). 6) Sub-contract PRA effort (implemented).	2+2=(4)	1+1=(2)	N.M

INSTRUMENT OVERVIEW

UTD Instrumentation

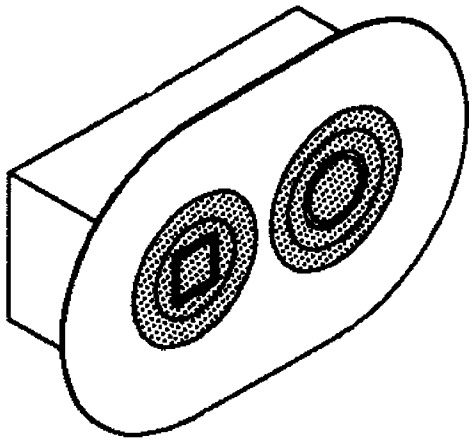

Ion Density and Drift Velocity

Retarding Potential Analyzer (RPA)
to measure kinetic energy of ions along the sensor look direction.
Ion Drift Meter (IDM)
to measure ion arrival angle with respect to sensor look direction.

RPA and IDM measure ambient ion flux and thus ion density.

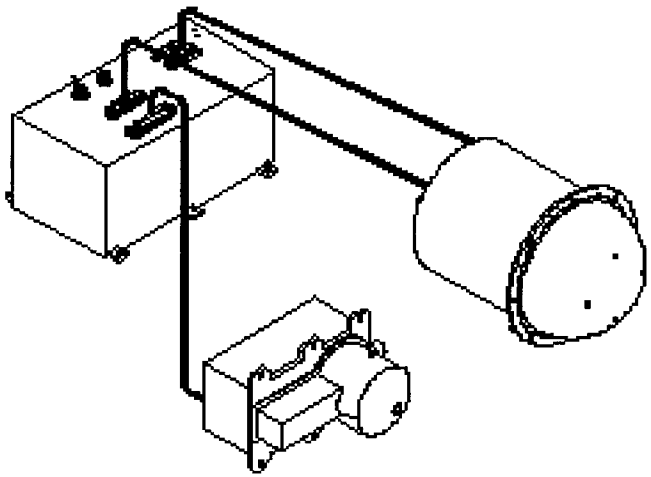

Neutral Wind Velocity

Ram Wind Sensor (RWS)
to measure kinetic energy of neutrals along the sensor look direction.
Cross-Track Wind Sensor (CTS)
to measure neutral arrival angle with respect to sensor look direction

RWS measures an ionized fraction of the neutral gas.
CTS measures a neutral pressure ratio

CINDI MEASUREMENT APPROACH

Ion Density and Drift Velocity

Retarding Potential Analyzer (RPA)
to measure kinetic energy of ions along the sensor look direction.
Ion Drift Meter (IDM)
to measure ion arrival angle with respect to sensor look direction.

RPA and IDM measure incoming ion flux and thus ion density.

Neutral Wind Velocity

Ram Wind Sensor (RWS)
to measure kinetic energy of neutrals along the sensor look direction.
Cross-Track Wind Sensor (CTS)
to measure neutral arrival angle with respect to sensor look direction

PRINCIPLES OF OPERATION

IVM and NWM measure 3 mutually perpendicular components of the velocity.

RPA and RWS Measure
Ram Component V_r

Dominated by Satellite Velocity

Derived from measurement of the kinetic energy of the gas along the sensor look direction. i.e. along the ram direction.

$$KE = \frac{1}{2} m \left(V_{s_r} + V_r \right)^2 + e\,\psi\,*$$

*** Not required for RWS**

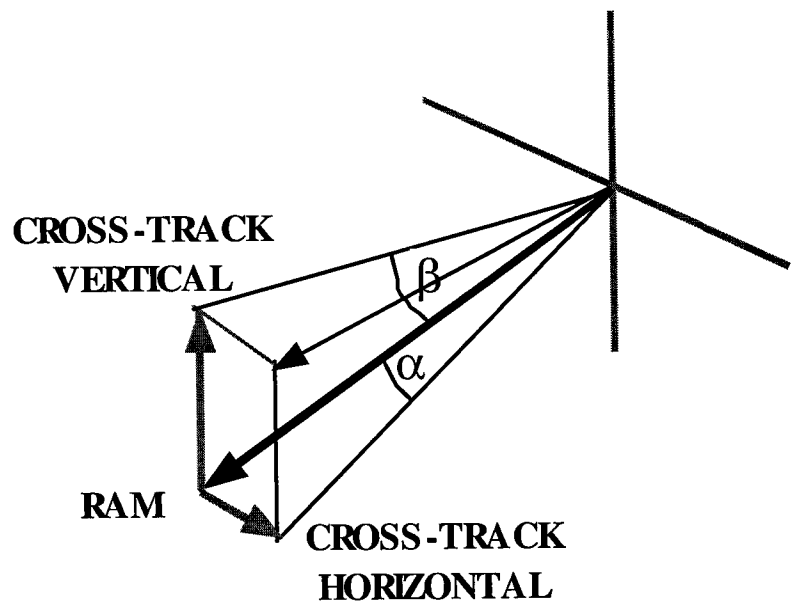

IDM and CTS Measure Cross-Track Component V_v and V_h

Derived by measuring vertical and horizontal arrival angles.

$$V_h = \left(V_{s_r} + V_r \right) \tan \alpha \quad ; \quad V_v = \left(V_{s_r} + V_r \right) \tan \beta$$

ARRIVAL ANGLE MEASUREMENT

Ion Drift Meter

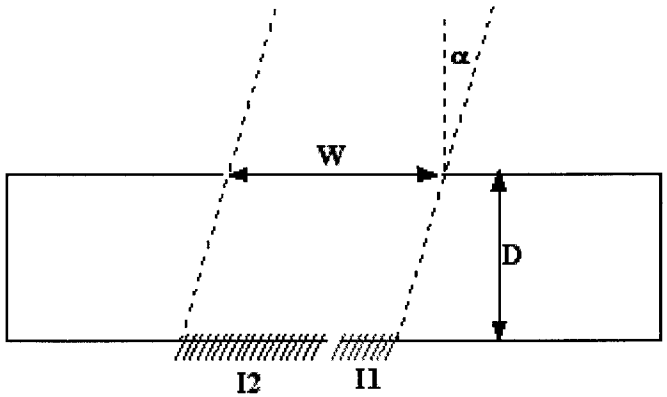

$$\frac{I1}{I2} = \frac{W/2 - D\tan\alpha}{W/2 + D\tan\alpha}$$

Arrival angle proportional to Current Ratio

Cross-Track Wind Sensor

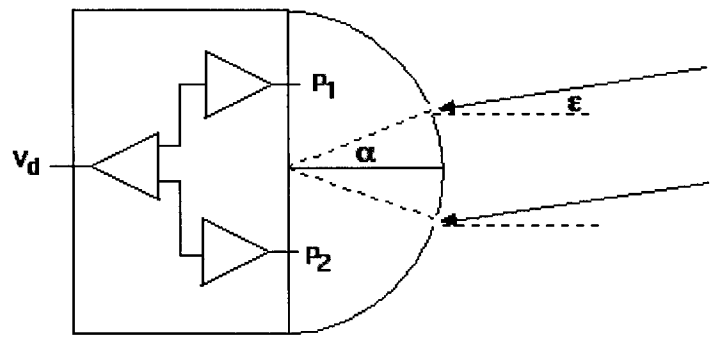

$$V_d = G_d C \ln\left(\frac{P_1}{P_2}\right) = G_d C \ln\left(\frac{\cos(\alpha - \varepsilon)}{\cos(\alpha + \varepsilon)}\right)$$

Arrival angle proportional to Pressure Ratio

KINETIC ENERGY MEASUREMENT

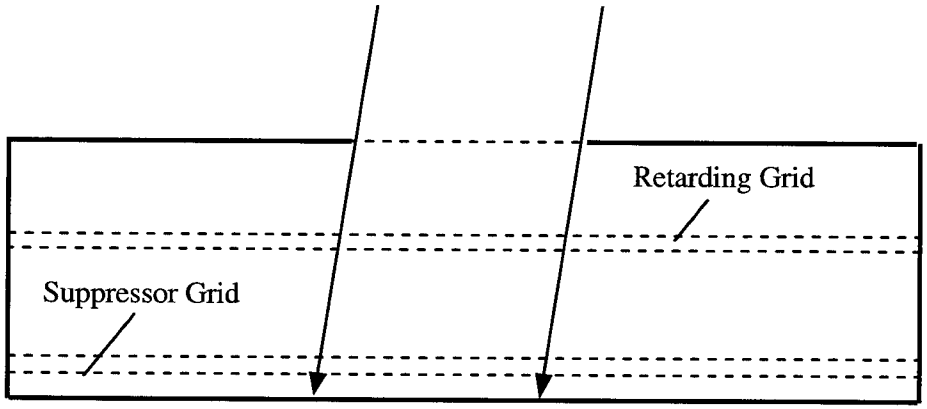

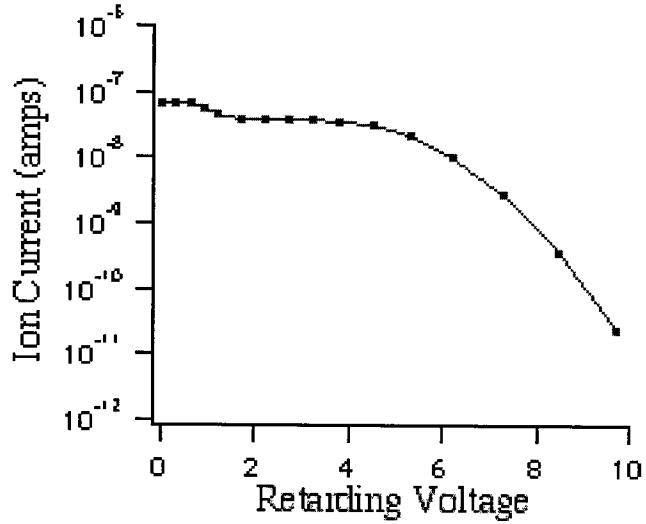

$$\Phi(P) = \frac{n}{2} V_r \left[1 + \operatorname{erf} \beta f + \frac{1}{\sqrt{\pi}\beta V_r} \exp\left(-\beta^2 f^2\right) \right]$$

where

$f = V_r - (2P/m)^{1/2}$

$P = q(R_v + \psi_s)$

$\beta = (m/2kT)^{1/2}$

$V_r = -\left(\vec{V}_d + \vec{V}_s\right) \cdot \hat{n}$

$\hat{n} =$ unit normal in look direction of sensor

Output Current depends on Input Flux.

Input Flux Modulated by Retarding Potential.

Functional fitting yields Ram Drift of Particles.

IVM OPERATIONAL PROFILE

IDM

Horizontal / Vertical fixed or alternates every 1/8 or 4 secs
Difference Amplifier Output Sampled at 128 Hz
16 bit samples
4 Log Amp Outputs Sampled sequentially at 16 Hz
16 bit samples

RPA

Retarding Grid Voltage Stepped at 32 Hz
Sweep Sequence Selected from Memory; One of 8 Blocks with 32 Locations
32 Steps can comprise 1 sweep ; 2 sweeps ; 4 sweeps
Electrometer Output Sampled at 32 Hz
16 bit samples

Total Telemetry Rate ~ 3 kbps including housekeeping and packetization

NWM OPERATIONAL PROFILE

CTS

Horizontal and Vertical arrival angles measured separately with
2 Difference Amplifier Output each Sampled at 8Hz
16 bit samples
4 Log Amp Outputs Sampled sequentially at 16 Hz
16 bit samples

RWS

Retarding Grid Voltage Stepped at 32 Hz
Sweep Sequence Selected from Memory; One of 8 Blocks with 32 Locations
32 Steps can comprise 1 sweep ; 2 sweeps ; 4 sweeps
Electrometer Output Sampled at 32 Hz
16 bit samples

Total Telemetry Rate ~ 1.5 kbps including housekeeping and packetization

SYSTEM REQUIREMENT ANALYSIS
POINTING

- Pointing Requirement Imposed on the Spacecraft
  - Boresight Knowledge +/-0.1 deg
  - Boresight Attitude Control +/- 2 deg
  - The above includes entire S/C budget (alignment and pointing)
- IVM and NWS measure velocity wrt the S/C, so the S/C velocity must be removed to obtain the ambient drift.
  - DC errors will be removed during data processing
  - Internal sensor alignment contributes less than .01 degrees to error budget

Above requirements captured in ICD and satisfied by S/C design.

IVM/NWM ALIGNMENT BUDGET

- Instrument internal error - <0.01°
  - Boresight to alignment mirror analysis
- Instrument mirror to SV ref - 0.015°
  - Measurement error - 0.005°
  - On-orbit shift error - 0.010°
  - SAI 1169-EI-Y25125 (S/C to PL ICD)
- Attitude control system uncertainty - < 0.03°
  - SAI PDR
- Verification methods
  - Pitch and yaw verified by measurement
    - Placement within 0.05° of SV reference
  - Roll verified by instrument/RSAP mounting analysis
    - Placement within 2.0° of SV reference
- Combined uncertainty - 0.055°

SYSTEM REQUIREMENT ANALYSIS

Field of View

- IVM: +/-45 deg hemispherical from edges of sensor faces
- NWM: +/-45 deg from boresight, hemispherical for each sensor

  Intrusions must be >2 meters away

  No intrusions in front within a 25 cm. Radius of each sensor

On-Orbit Data Requirements

- Time code and time sync

Timing Requirements

- Relative to other instruments: 100 ms.
- To absolute UT: 0.5 sec

Above requirements captured in ICD and satisfied by S/C design

SYSTEM REQUIREMENT ANALYSIS

Orbit

- **Ephemeris Prediction**
  - **NWM operations**
    - **Weekly turn-ons scheduled relative to UT of perigee. Predictions of UT or perigee required 1 week in advance with <1 min accuracy.**
  - **Campaigns**
    - **UT of closest approach to geographic location required 3-months in advance with 0.5 hour accuracy.**
- **Post-Processed Ephemeris**
  - **Data Interpretation**
    - **Geographic position of satellite known within 0.1° Latitude ; 1° Longitude ; 2 km Altitude**

<u>Above captured in CNOFS Data Center ICD</u>

SYSTEM REQUIREMENT ANALYSIS
THERMAL

- Conduction via box mounting surface
- Operating Limits: -10°C to +40°C
- Survival Limits: -30°C to +60°C
- RAM Aperture Surface: -40C to +100C
- Test Temperatures
  - Operating Limits: -20°C to +50°C
  - Survival Limits: -35°C to +65°C
  - Demonstrate cold start at –20C

Above requirements captured in ICD and verified by analysis and test

SYSTEM REQUIREMENT ANALYSIS
EMI/EMC

- No S/C magnetic fields >100 milliGauss in IVM FOV
- Stable vehicle potential near the plasma potential required for IVM
  - No exposed positive potentials
  - Conducting area on S/C RAM face for ion collection
- No electric field susceptibility at predicted levels
- General EMI/EMC requirements addressed in Integration and Test section

Above requirements captured in ICD

SYSTEM REQUIREMENT ANALYSIS
S/C Charging and Mag/Electric Fields

- Extensive analysis of S/C design indicates a stable, ideal vehicle potential within 1.5 volts of the plasma potential
  - GSFC solar panel design – hidden potentials, ITO coating
- 50 mG S/C allotment in IVM FOV
- 50 mG instrument allotment in IVM FOV
  - RWS ion source magnet <20 mG at 20 cm.
  - PEV solenoid < 5.5 mG at 20 cm.
  - No other significant instrument magnetic sources

IVM/NWM MAGNETIC SOURCES

- IVM contains no magnets
- RWS ion source contains a permanent magnet
  - <20 milligaus at 20cm (approximate RWS to IVM distance)
  - <3.5 nanoTesla at 1 meter (approximate distance to MAG = 1.6m)
- CTS contains a solenoid
  - Low "on" duty cycle
    - 3 actuations/orbit, 16 seconds/actuation (nominal)
    - 50 milliseconds full power, ~16 seconds holding power
  - Measured stray field - worst case field component

	OFF	**Full Power**	**Hold**
at 20cm	5.5mG	152mG	38mG
at 1 meter	29nT	1176nT	294nT
at 1.5 meter (calculated)	9nT	350nT	87nT

SYSTEM REQUIREMENT ANALYSIS
TELEMETRY

- TELEMETRY RATES
  - IVM – 3072 bps constant, all modes
  - NWM – 1536 bps constant, all modes
- 4 Second latency(4 second data packet buffered in instrument)
- Bit Error Rate – nominal 10^{-5}

Above requirements captured in ICD

SYSTEM REQUIREMENT ANALYSIS COMMANDS

- One 16 bit command word
  - Latch address and 8 bits command data
- IVM – 1 addressable command latch, 22 possible data values
- NWM – 9 addressable latches, <256 possible data values each
- Max Command Frequency - < one command/sec
- NWM – 3 commands/orbit typical
- IVM - minimal commanding after early orbit checkout
- No time-critical commands

Above requirements captured in ICD

REQUIREMENTS FLOWDOWN

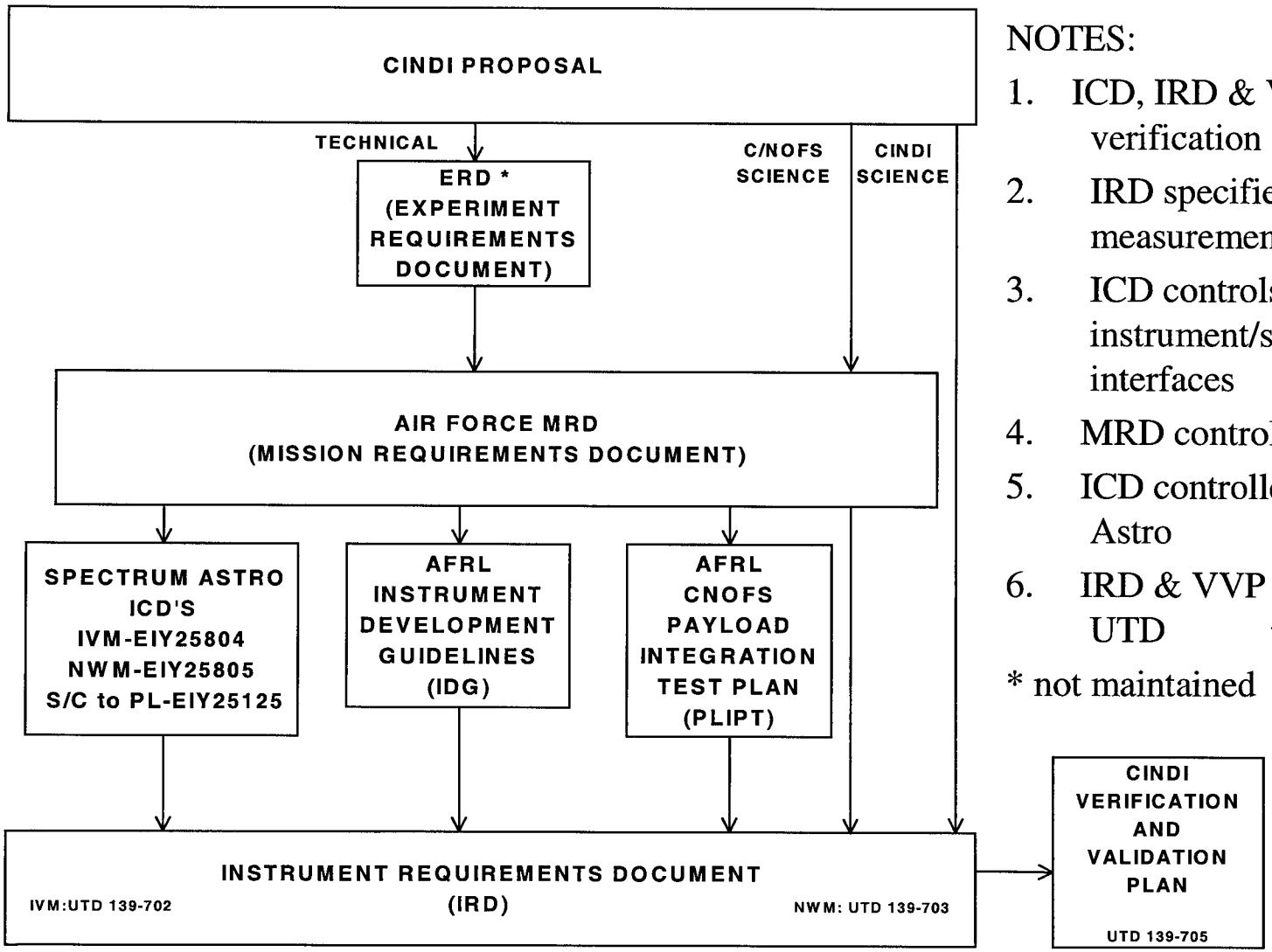

NOTES:

1. ICD, IRD & VVP contain verification matrices
2. IRD specifies instrument measurement requirements
3. ICD controls all instrument/spacecraft interfaces
4. MRD controlled by Air Force
5. ICD controlled by Spectrum Astro
6. IRD & VVP controlled by UTD

* not maintained

SCIENCE MEASUREMENT REQUIREMENTS

PRIMARY MEASUREMENTS

Source: CINDI Proposal and C/NOFS Science

Parameter	Dynamic Range	Accuracy
1. Ion Drift Vector	-500 m/s to +500 m/s	± 2 m/s
2. Neutral Wind Vector	-500 m/s to + 500 m/s	± 10 m/s

SECONDARY MEASUREMENTS

Source: C/NOFS and CINDI Science

Parameter	Dynamic Range	Accuracy
3. Total Ion Concentration	50 to 5×10^6 cm^{-3}	1%
4. Ion Temperature	500 to 7000 K	50 K

MEASUREMENT ENVIRONMENT

PARAMETER	DYNAMIC RANGE
5. Total Ion Concentration	50 to 5×10^6 cm^{-3}
6. Ion Mass Range	1 to 32 amu
7. Ion Temperature	500 to 7000 K
8. Total Neutral Concentration	6×10^6 to 6×10^8 cm^{-3}
9. Neutral Mass Range	4 to 16 amu
10. Neutral Temperature	500 to 4000 K

FLOW DOWN REQUIREMENTS ENGINEERING MEASUREMENTS

Source #	Parameter	Value
3,5	RPA Current Range	3×10^{-11} to 3×10^{-6} A
3	RPA Current Accuracy	1 %
6,7	Max RPA R.V.	19 V
1,4	RPA R.V. Accuracy	3 mV
1,5	IDM Current Range	5×10^{-11} to 6×10^{-7} A
1	IDM Max Current Ratio	1.27
1	IDM Curr Ratio Resolution	1.0006
8,10	RWS Current Range	4×10^{-11} to 4×10^{-9} A
8,9,10	Max RWS R.V.	10 V
2,10	RWS R.V. Accuracy	7 mV
2,8,10	XTRK Current Range	3×10^{-11} to 3×10^{-9} A
2	XTRK Max Current Ratio	1.086
2	XTRK Current Ratio Resolution	1.001

VERIFICATION MATRIX

See attached file "Verification and Validation Matrix.doc"

DESIGN HERITAGE 1

IVM – DMSP, ROCSAT1, AE, DE, OGO-F

- Repackaged to eliminate separate Ebox
- Modified controller/1553 interface design – used in IVM and NWM – Peer Review by Mike McClelland, SwRI

NWM – Sensors developed and tested in the laboratory

- Subsystem heritage.
  - XTRK ion gauge – standard Bayard-Alpert gauge flown by others – initial UTD development for NASA AFE experiment– further development /testing on NASA PIDP grant
  - XTRK pressure ratio circuits – IVM
  - RWS retarding potential generator – IVM

DESIGN HERITAGE 2

- Filament/emission regulators – sounding rockets, Pioneer Venus, Apollo - Peer Review by Art Ruitberg, GSFC
- RWS ion source – sounding rockets, Pioneer Venus, Apollo, AE - Peer Review-mag field containment by Mario Acuna, GSFC
- High Voltage Power Supply – AE, Pioneer Venus, Apollo, sounding rockets - Peer Review by Art Ruitberg, GSFC
- Medium Voltage Power Supplies – San Marco, ROCSAT1 – Peer Review by Art Ruitberg, GSFC
- RWS log electrometer – DMSP
- A/D and analog multiplexing – ROCSAT1,DMSP,others

DESIGN HERITAGE 3

- Prototypes of all RWS and NWM sensor boards built and tested over temperature
  - XTRK pressure ratio circuits
  - Filament/emission regulators
  - High Voltage Power Supply
  - Medium Voltage Power Supplies
- RWS prototype sensor with multiplier/ion source built and extensively tested in vacuum chamber
- Crosstrack Sensor extensively tested and developed under NASA PDIP grant
- Prototype of Digital Controller/1553 interface in assembly

1553 INTERFACE OVERVIEW

- 1553 interface implemented with rad-hard DDC BU65142
  - Data packets
  - Commands
  - Time Code/Time Sync
- Simple, repetitious operation in selected mode
- Evenly-spaced sampling of primary data
- Digital controller implemented in Actel FPGA with field programmable PROM for decoding data sample/store times

INTERFACE BLOCK DIAGRAM

IVM/NWM INTERFACE BLOCK DIAGRAM

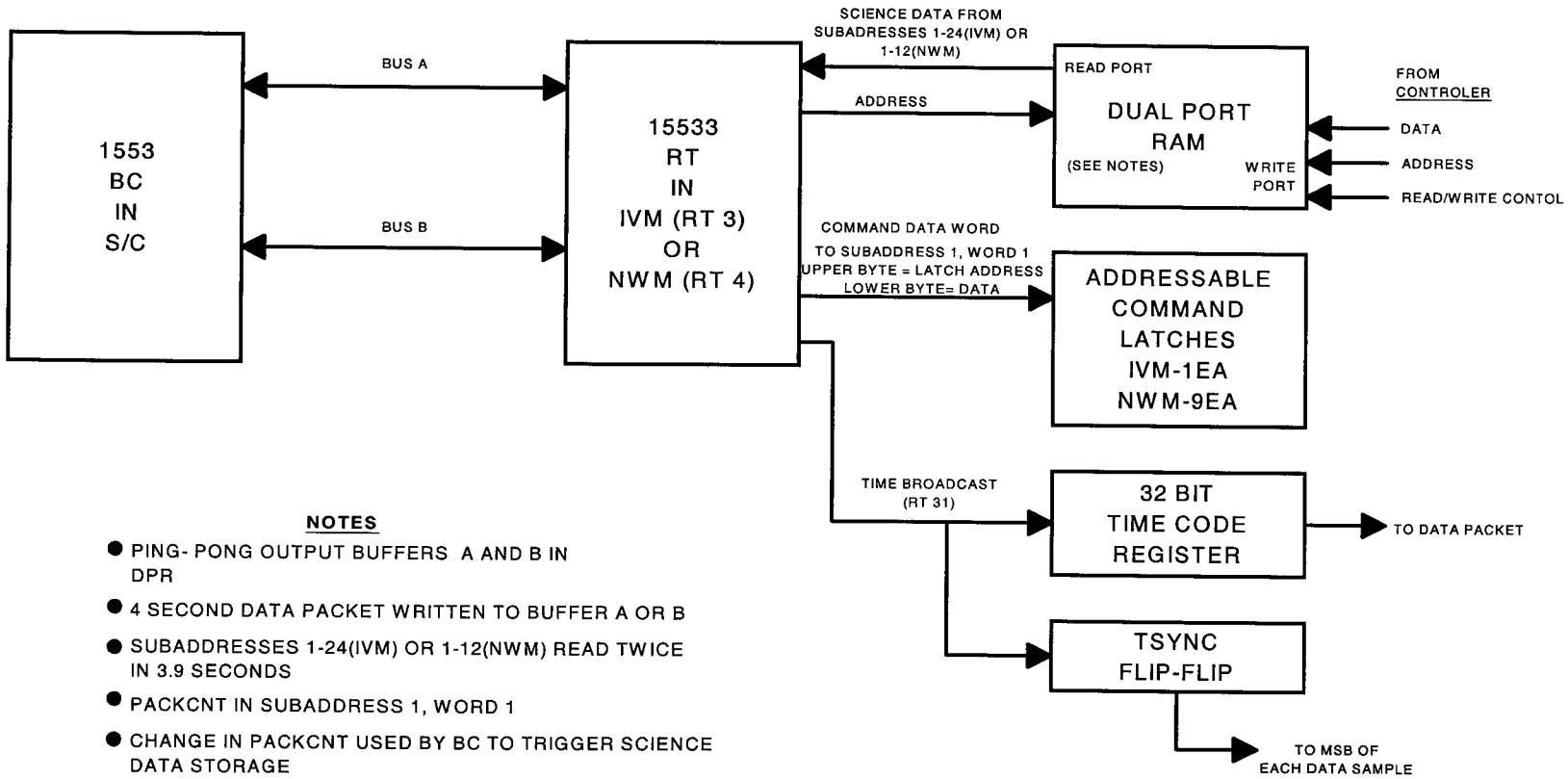

NOTES

- PING- PONG OUTPUT BUFFERS A AND B IN DPR
- 4 SECOND DATA PACKET WRITTEN TO BUFFER A OR B
- SUBADDRESSES 1-24(IVM) OR 1-12(NWM) READ TWICE IN 3.9 SECONDS
- PACKCNT IN SUBADDRESS 1, WORD 1
- CHANGE IN PACKCNT USED BY BC TO TRIGGER SCIENCE DATA STORAGE
- STATE OF HEALTH (SOH) DATA IN SUBADDRESS 1
- IVM PACKET SIZE = 768 WORDS
- NWM PACKET SIZE = 384 WORDS

CINDI
IVM/NWM

1553 SCHEDULE A

C/NOFS

C/NOFS MIL-STD-1553B SCHEDULE 1.2 June 19, 2001				
ALL PAYLOADS IN BURST MODE BUT VEFI				
		SCHEDULE A		
CYCLE 0		**( ) = Number of packets**		
Broadcast Time		**[ ] = Sub-address(es)**		
Broadcast Synch				
	CYCLE 1	**CYCLE 2**	**CYCLE 3**	**CYCLE 4**
CORISS Data(19)[1-19]	CORISS Data(19)[1-19]	CORISS Data(19)[1-19]	CORISS Data(19)[1-19]	CORISS Data(19)[1-19]
DIDM Data(4)[5-8]	DIDM Data(4)[5-8]	DIDM Data(4)[5-8]	DIDM Data(4)[5-8]	DIDM Data(4)[5-8]
PLP Data(5)[1-5]	PLP Data(5)[1-5]	PLP Data(5)[1-5]	PLP Data(5)[1-5]	PLP Data(5)[1-5]
PLP SOH (1)[30]	DIDM SOH (1)[30]	CORISS SOH(1)[30]	VEFI SOH(1)[30]	
VEFI Data(4)[2]	VEFI Data(4)[2]	VEFI Data(4)[2]	VEFI Data(4)[2]	VEFI Data(4)[2]
VEFI TDRSS(1)[1]	VEFI TDRSS(1)[1]	VEFI TDRSS(1)[1]	VEFI TDRSS(1)[1]	
CYCLE 5	**CYCLE 6**	**CYCLE 7**	**CYCLE 8**	**CYCLE 9**
CORISS Data(19)[1-19]	CORISS Data(19)[1-19]	CORISS Data(19)[1-19]	CORISS Data(19)[1-19]	CORISS Data(19)[1-19]
DIDM Data(4)[5-8]	DIDM Data(4)[5-8]	DIDM Data(4)[5-8]	DIDM Data(4)[5-8]	DIDM Data(4)[5-8]
PLP Data(5)[1-5]	PLP Data(5)[1-5]	PLP Data(5)[1-5]	PLP Data(5)[1-5]	PLP Data(5)[1-5]
VEFI Data(4)[2]	VEFI Data(4)[2]	VEFI Data(4)[2]	VEFI Data(4)[2]	VEFI Data(4)[2]
	Skipped	Skipped	Skipped	Skipped

1553 SCHEDULE B

		SCHEDULE B		
CYCLE 0		**( ) = Number of packets**		
Broadcast Time		**[ ] = Sub-addresses**		
Broadcast Synch				
	CYCLE 1	**CYCLE 2**	**CYCLE 3**	**CYCLE 4**
CORISS Data(19)[1-19]	CORISS Data(19)[1-19]	CORISS Data(19)[1-19]	CORISS Data(19)[1-19]	CORISS Data(19)[1-19]
DIDM Data(4)[5-8]	DIDM Data(4)[5-8]	DIDM Data(4)[5-8]	DIDM Data(4)[5-8]	DIDM Data(4)[5-8]
PLP Data(5)[1-5]	PLP Data(5)[1-5]	PLP Data(5)[1-5]	PLP Data(5)[1-5]	PLP Data(5)[1-5]
PLP SOH (1)[30]	DIDM SOH (1)[30]	CORISS SOH(1)[30]	VEFI SOH(1)[30]	
VEFI Data(4)[2]	VEFI Data(4)[2]	VEFI Data(4)[2]	VEFI Data(4)[2]	VEFI Data(4)[2]
VEFI TDRSS(1)[1]	VEFI TDRSS(1)[1]	VEFI TDRSS(1)[1]	VEFI TDRSS(1)[1]	
CYCLE 5	**CYCLE 6**	**CYCLE 7**	**CYCLE 8**	**CYCLE 9**
CORISS Data(19)[1-19]	CORISS Data(19)[1-19]	CORISS Data(19)[1-19]	CORISS Data(19)[1-19]	CORISS Data(19)[1-19]
DIDM Data(4)[5-8]	DIDM Data(4)[5-8]	DIDM Data(4)[5-8]	DIDM Data(4)[5-8]	DIDM Data(4)[5-8]
PLP Data(5)[1-5]	PLP Data(5)[1-5]	PLP Data(5)[1-5]	PLP Data(5)[1-5]	PLP Data(5)[1-5]
VEFI Data(4)[2]	VEFI Data(4)[2]	VEFI Data(4)[2]	VEFI Data(4)[2]	VEFI Data(4)[2]
	Skipped	Skipped	Skipped	Skipped

CINDI
IVM/NWM

INTERFACE TIMING ANALYSIS

C/NOFS

IVM WORST CASE READ/WRITE TIMING

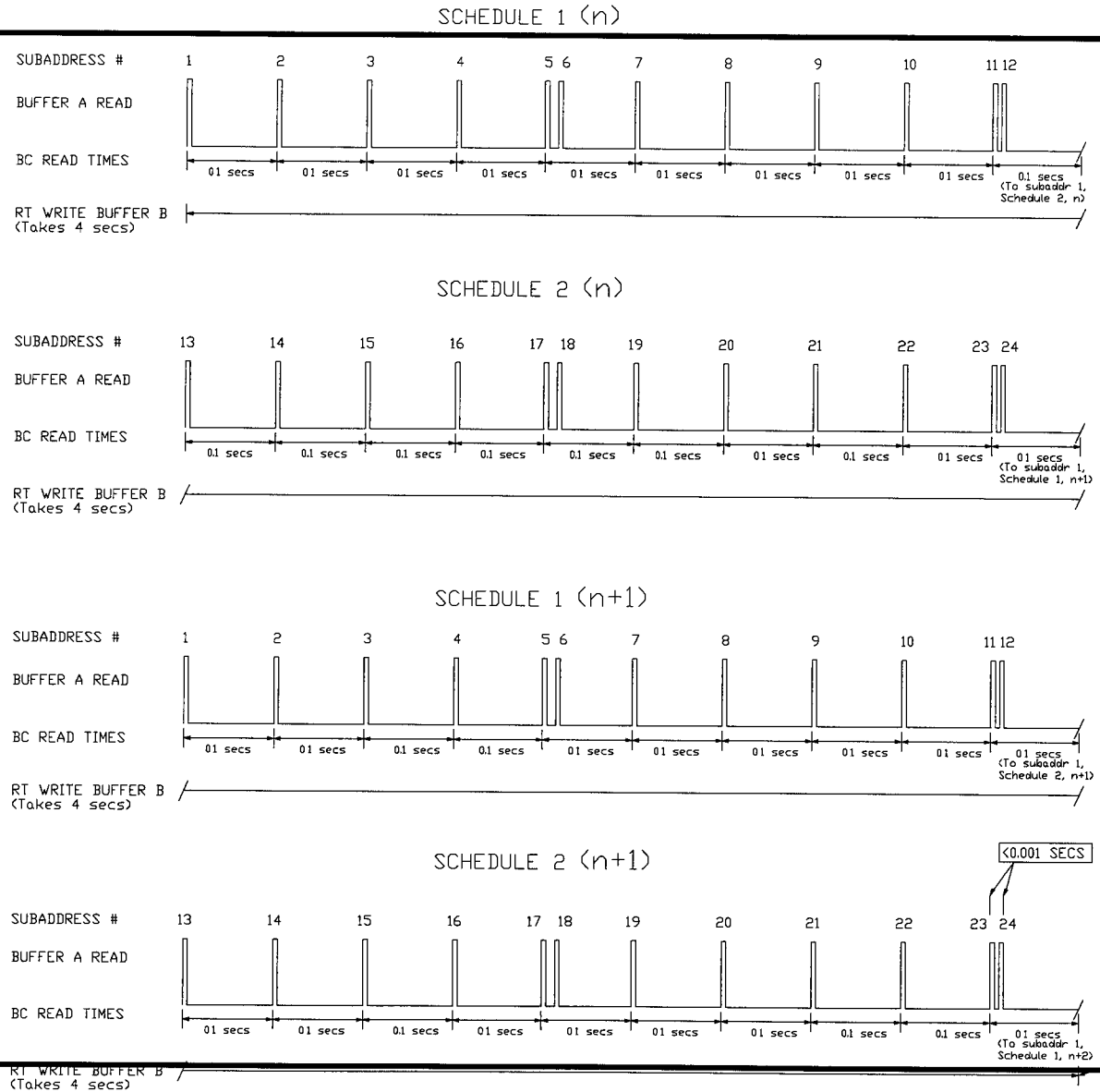

NOTES:

1. READ/WRITE OPERATIONS ARE ASYNCHRONOUS
2. IVM DATA PACKET IS 768 WORDS - 4 SECS
3. DATA PACKET STORED IN SUBADDRESSES 1-24
4. PACKET COUNTER(PACKCNT) IN SUBADDRESS 1
5. CHANGE IN PACKCNT TRIGGERS BC DATA STORAGE

- Completion of Buffer B Write
- Switch BC Read to BufferB
- Switch RT Write to Buffer A
- (Switching disallowed if BC is reading subaddress 1)
- Continue above 4 sec cycle

1553 INTERFACE VERIFICATION

- Instrument GSE emulates S/C 1553 fixed schedule
- Mid-Jan 02 test with Interface Verification Unit(IVU) at SAI with representative S/C 1553 hardware
  - IVU is prototype of IVM/NWM controller
  - Hardware compatibility verification
- Feb 02 test with Interface Verification Unit(IVU) and AFRL interface simulator at UTD – bus traffic simulation
- April 02 flight instrument tests with S/C simulator
- Integration tests with payload module at KAFB
- Integration tests with S/C at Spectrum Astro

POWER INTERFACE VERIFICATION

- Early analysis of S/C power interface completed
- C/NOFS Systems Engineer performed early review of IVM/NWM power interface
- Instrument GSE emulates power interface
- Surge/inrush current measurements at UTD
  - IVM/NWM will comply with inrush current specification
- Most frequent power switching is internal to NWM via 1553
  - Verifiable using GSE
  - Interface verification during payload module testing at AFRL

INTERFACE COMPLIANCE SUMMARY

- All interface requirements expected to be met except for the magnetic field requirement
- Mag specification: Less than 50 mG at 20 cm.

  Less than 50 nT at 1.5 meters
- Out of spec when solenoid is energized
  - Infrequent, known, short duration actuations
  - Waiver required

MECHANICAL DESIGN

SA RSAP DESIGN STUDY

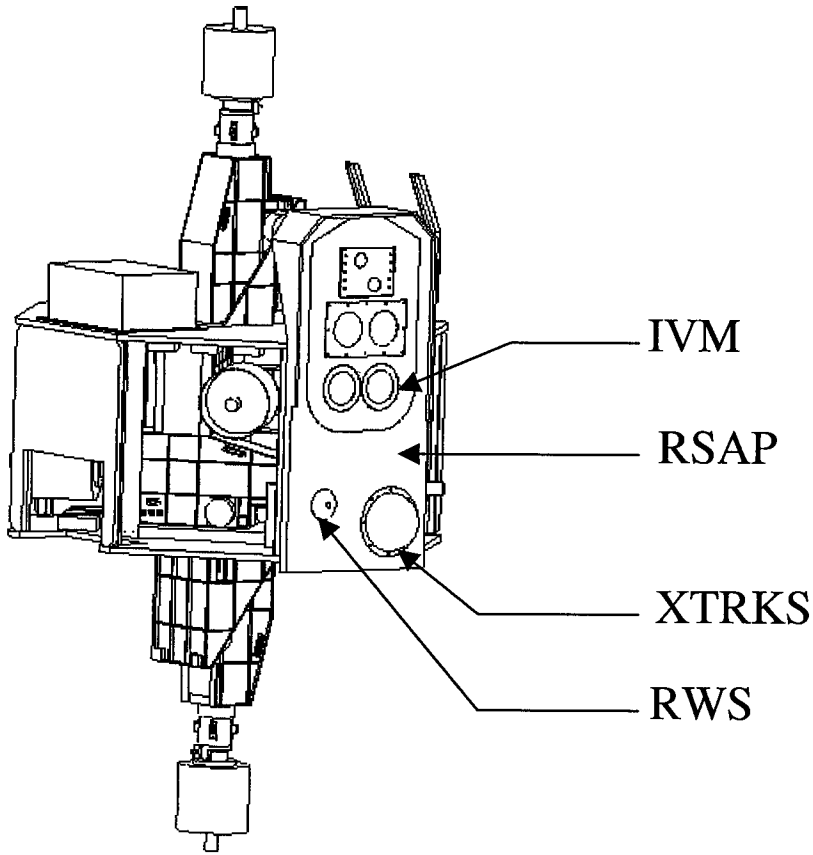

SA RSAP CONFIGURATION

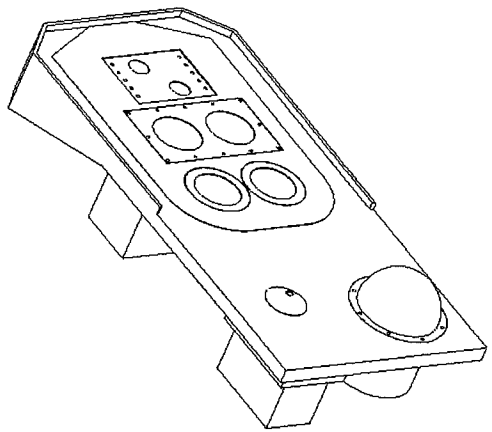

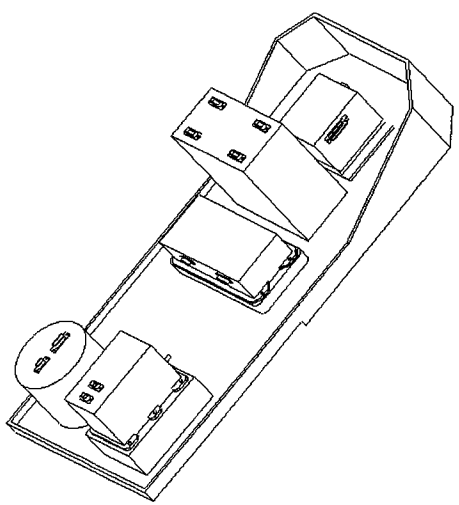

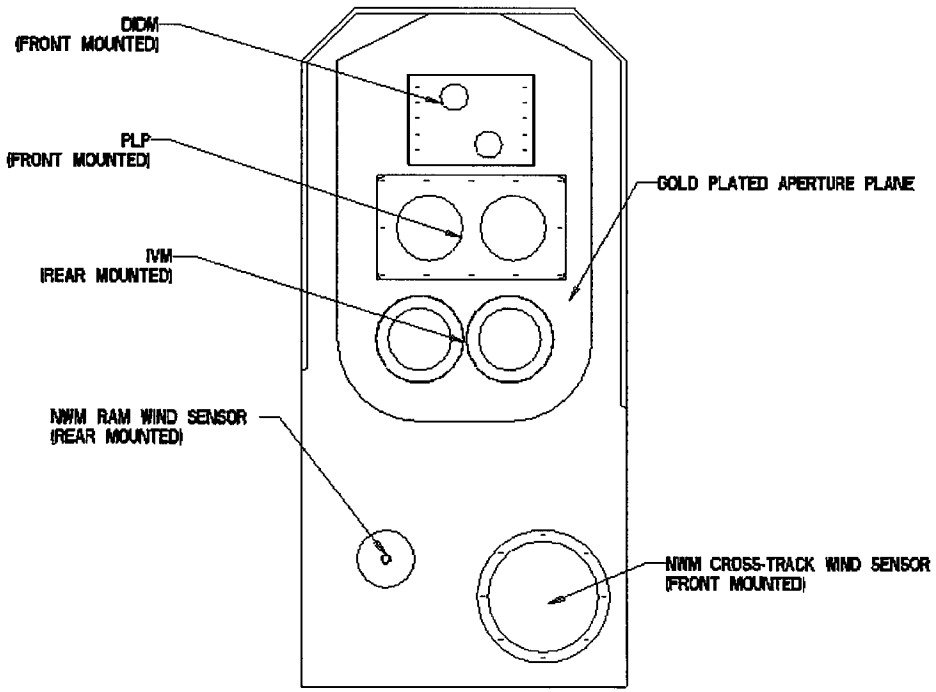

C/NOFS RAM SURFACE INSTRUMENT ACCOMMODATION ILLUSTRATION

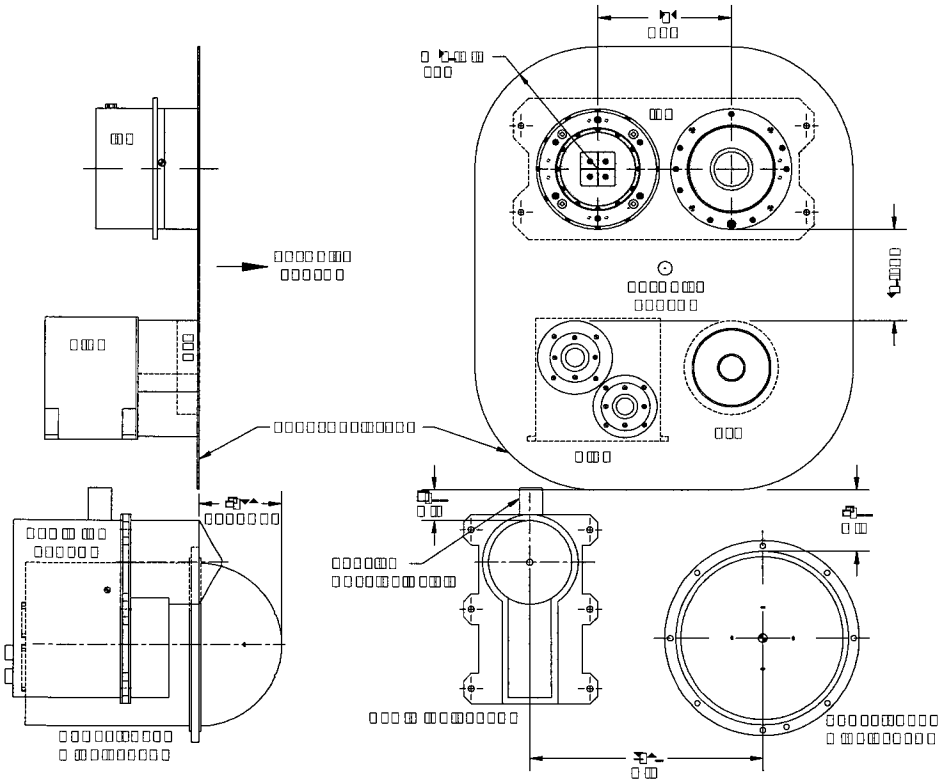

ION VELOCITY METER OUTLINE/INTERFACE

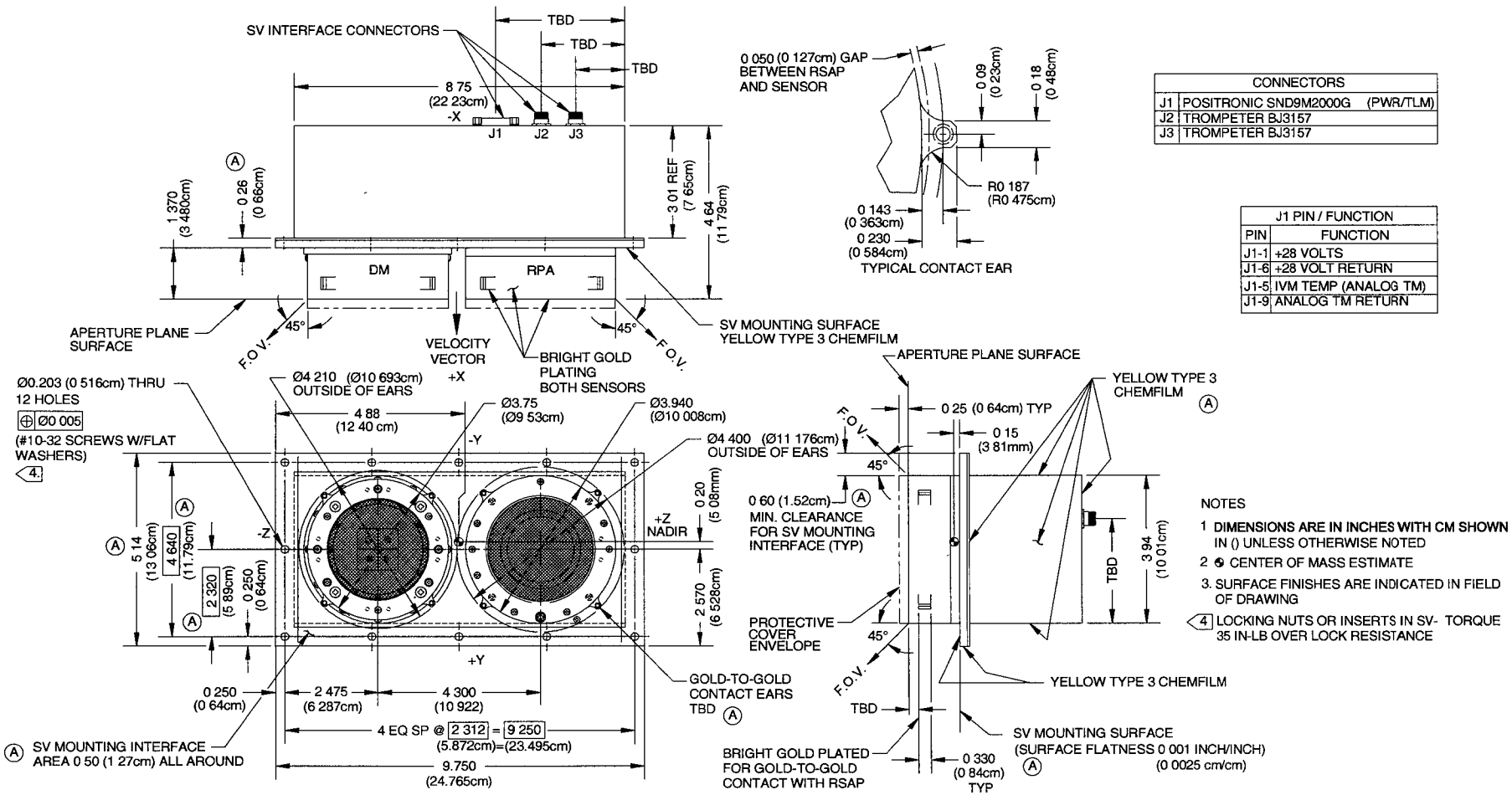

CONNECTORS		
J1	POSITRONIC SND9M2000G	(PWR/TLM)
J2	TROMPETER BJ3157	
J3	TROMPETER BJ3157	

J1 PIN / FUNCTION	
PIN	FUNCTION
J1-1	+28 VOLTS
J1-6	+28 VOLT RETURN
J1-5	IVM TEMP (ANALOG TM)
J1-9	ANALOG TM RETURN

NOTES

1 DIMENSIONS ARE IN INCHES WITH CM SHOWN IN () UNLESS OTHERWISE NOTED

2 ⊕ CENTER OF MASS ESTIMATE

3. SURFACE FINISHES ARE INDICATED IN FIELD OF DRAWING

4 LOCKING NUTS OR INSERTS IN SV- TORQUE 35 IN-LB OVER LOCK RESISTANCE

ION VELOCITY METER X-SECTION

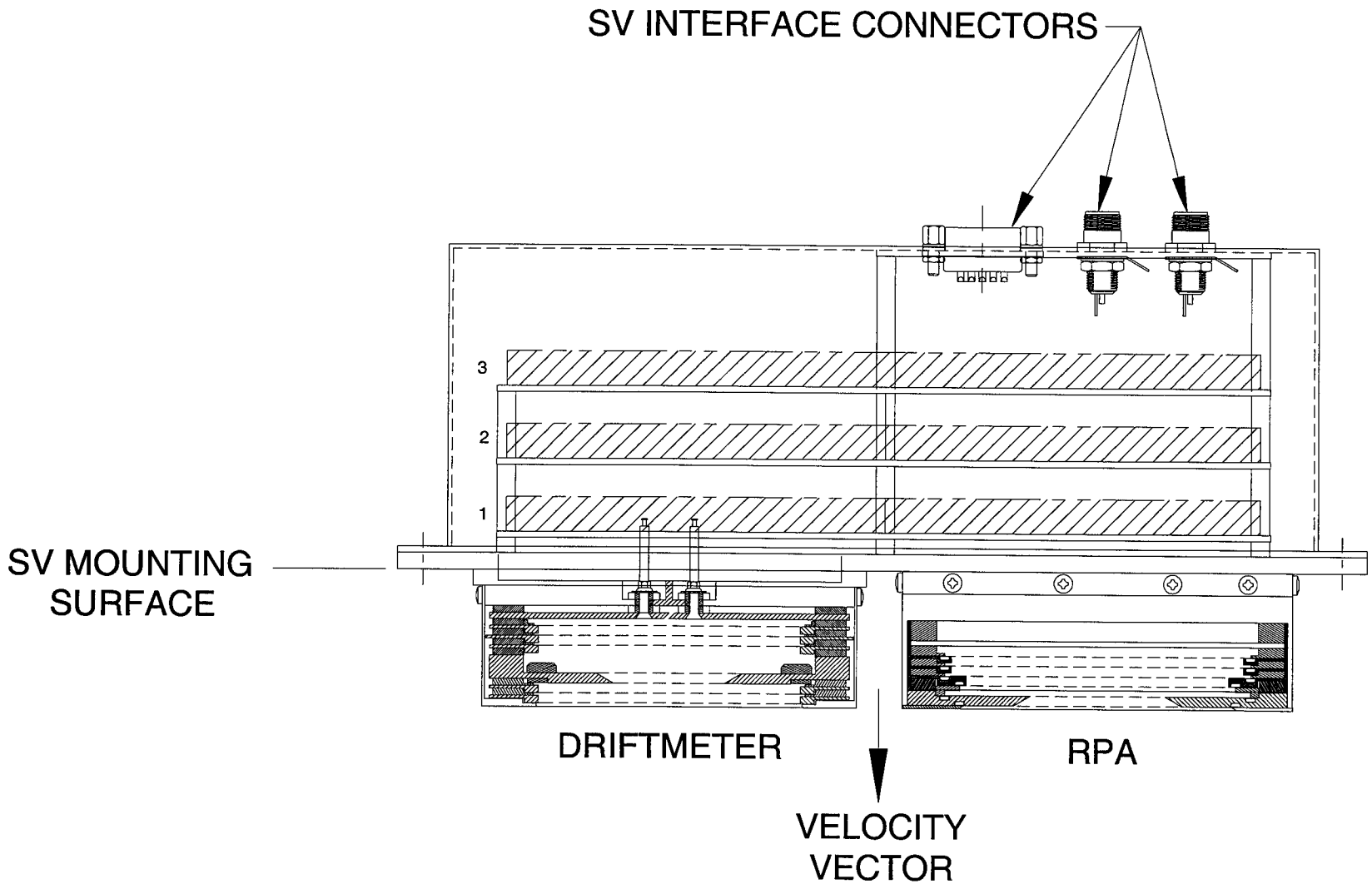

IVM HIGH LEVEL DRAWING TREE

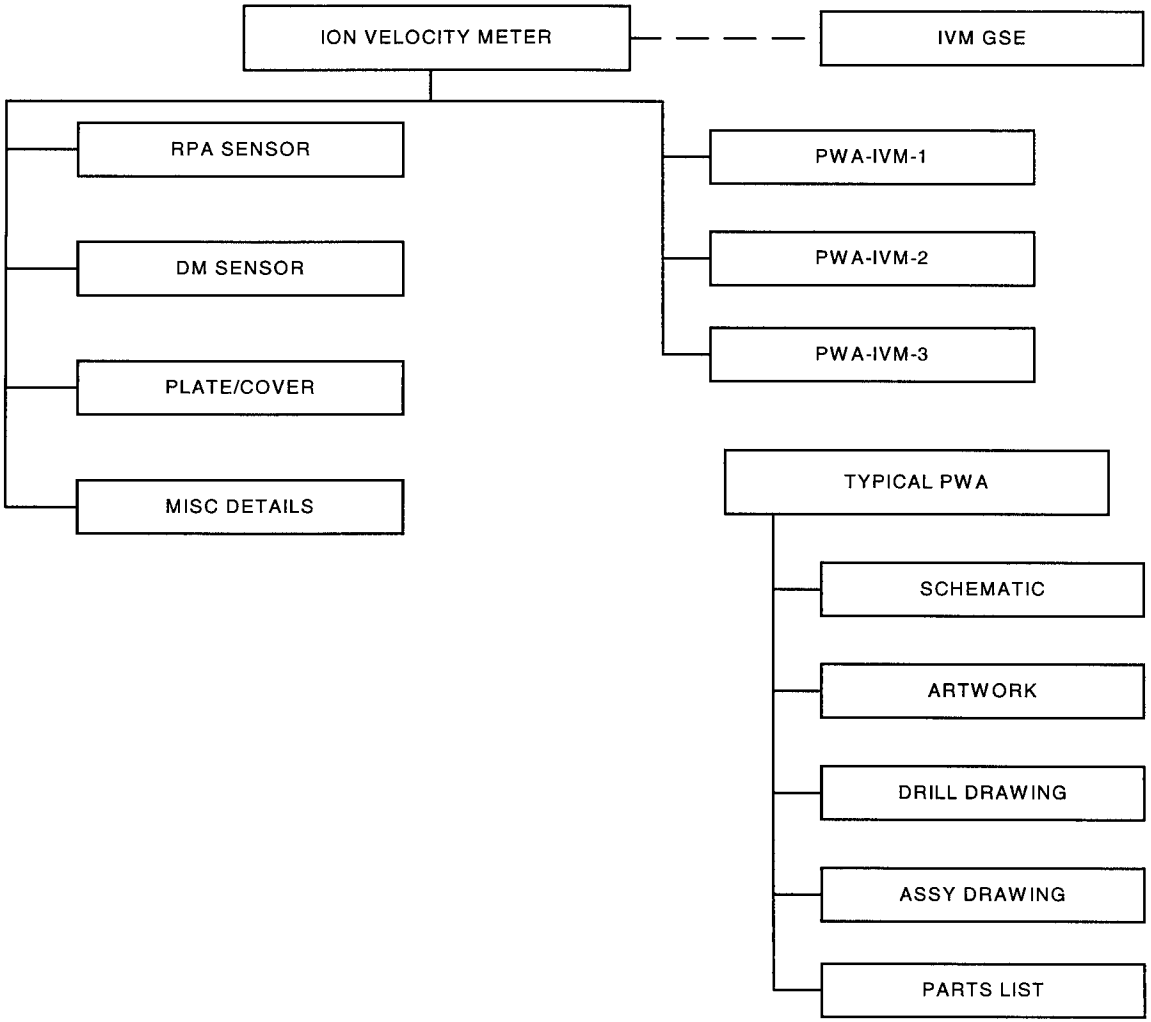

NEUTRAL WIND METER

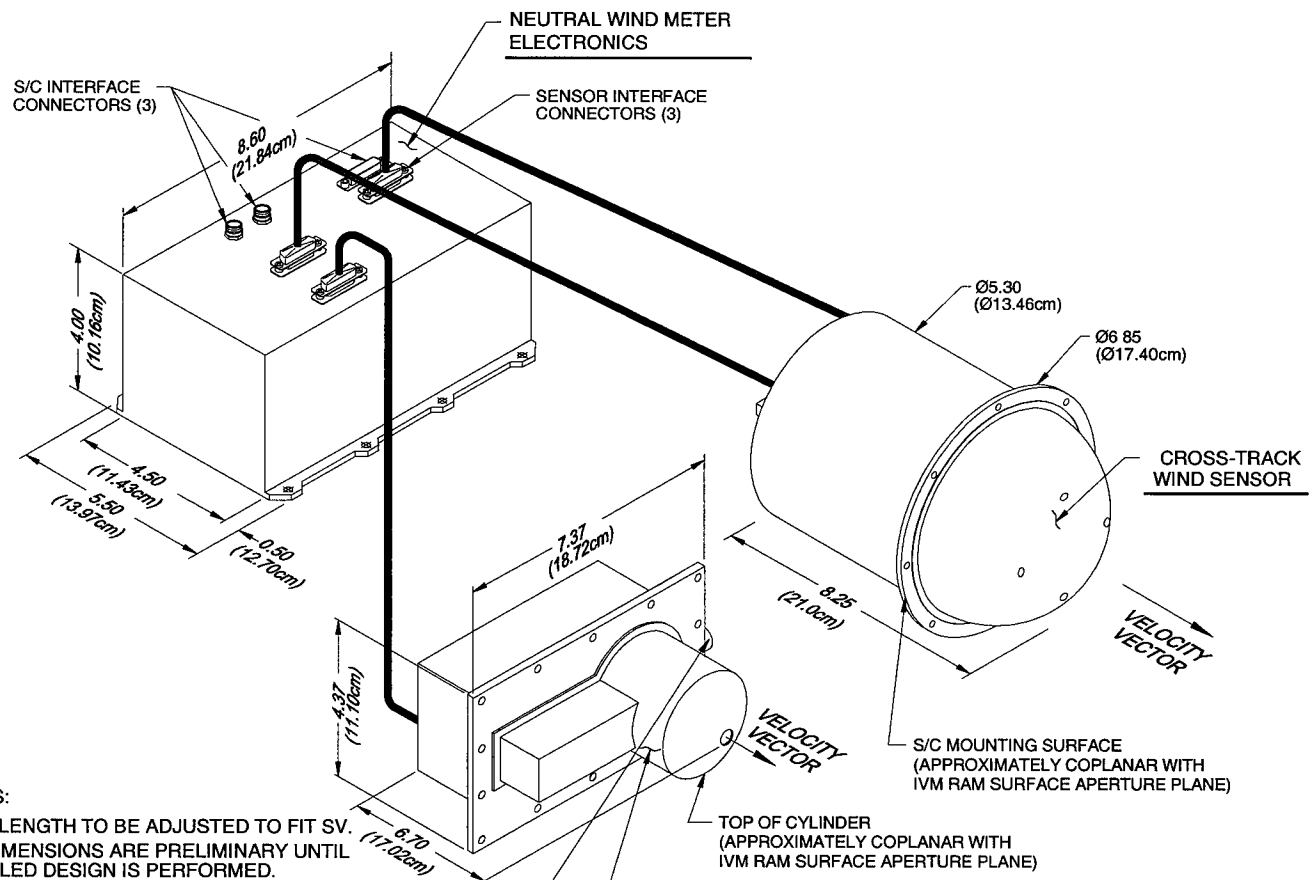

NOTES:

- VENT LENGTH TO BE ADJUSTED TO FIT SV.
- ALL DIMENSIONS ARE PRELIMINARY UNTIL DETAILED DESIGN IS PERFORMED.
- DIMENSIONS ARE IN INCHES WITH CM SHOWN IN () UNLESS OTHERWISE NOTED.
- MASS- 6.0kg (INCLUDES 0.2kg FOR INTRA-INSTRUMENT CABLES)
- INTRA- INSTRUMENT CABLES ENCLOSED IN EMI SHIELD AND FABRICATED BY UTD

THE UNIVERSITY OF TEXAS AT DALLAS/
GODDARD SPACE FLIGHT CENTER
MAR. 24, 2000

NWM XTRK WIND SENSOR OUTLINE/INTERFACE

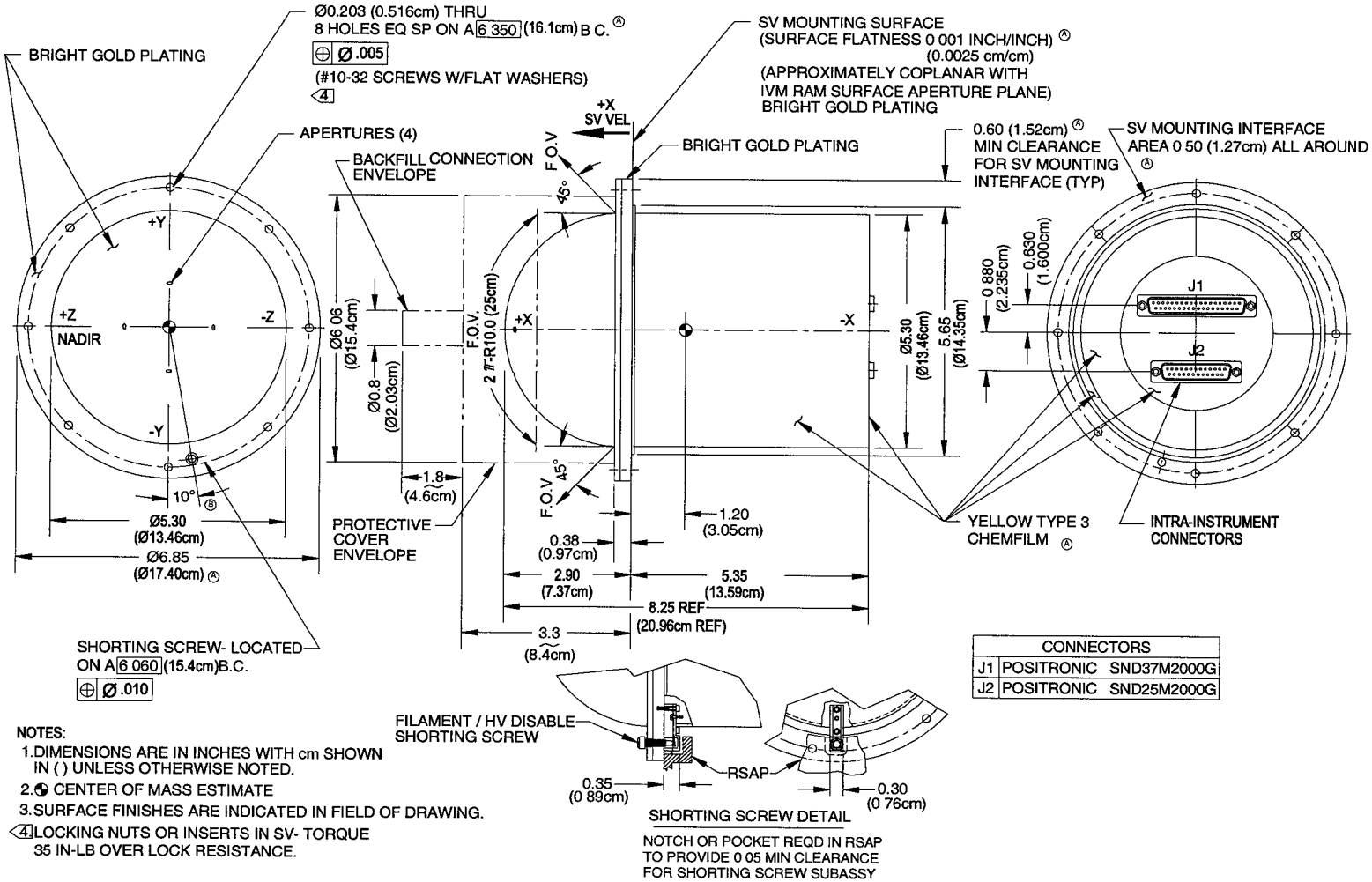

CONNECTORS	
J1	POSITRONIC SND37M2000G
J2	POSITRONIC SND25M2000G

NOTES:
1. DIMENSIONS ARE IN INCHES WITH cm SHOWN IN ( ) UNLESS OTHERWISE NOTED.
2. ⊕ CENTER OF MASS ESTIMATE
3. SURFACE FINISHES ARE INDICATED IN FIELD OF DRAWING.
4. LOCKING NUTS OR INSERTS IN SV- TORQUE 35 IN-LB OVER LOCK RESISTANCE.

NWM XTRK SENSOR X-SECTION

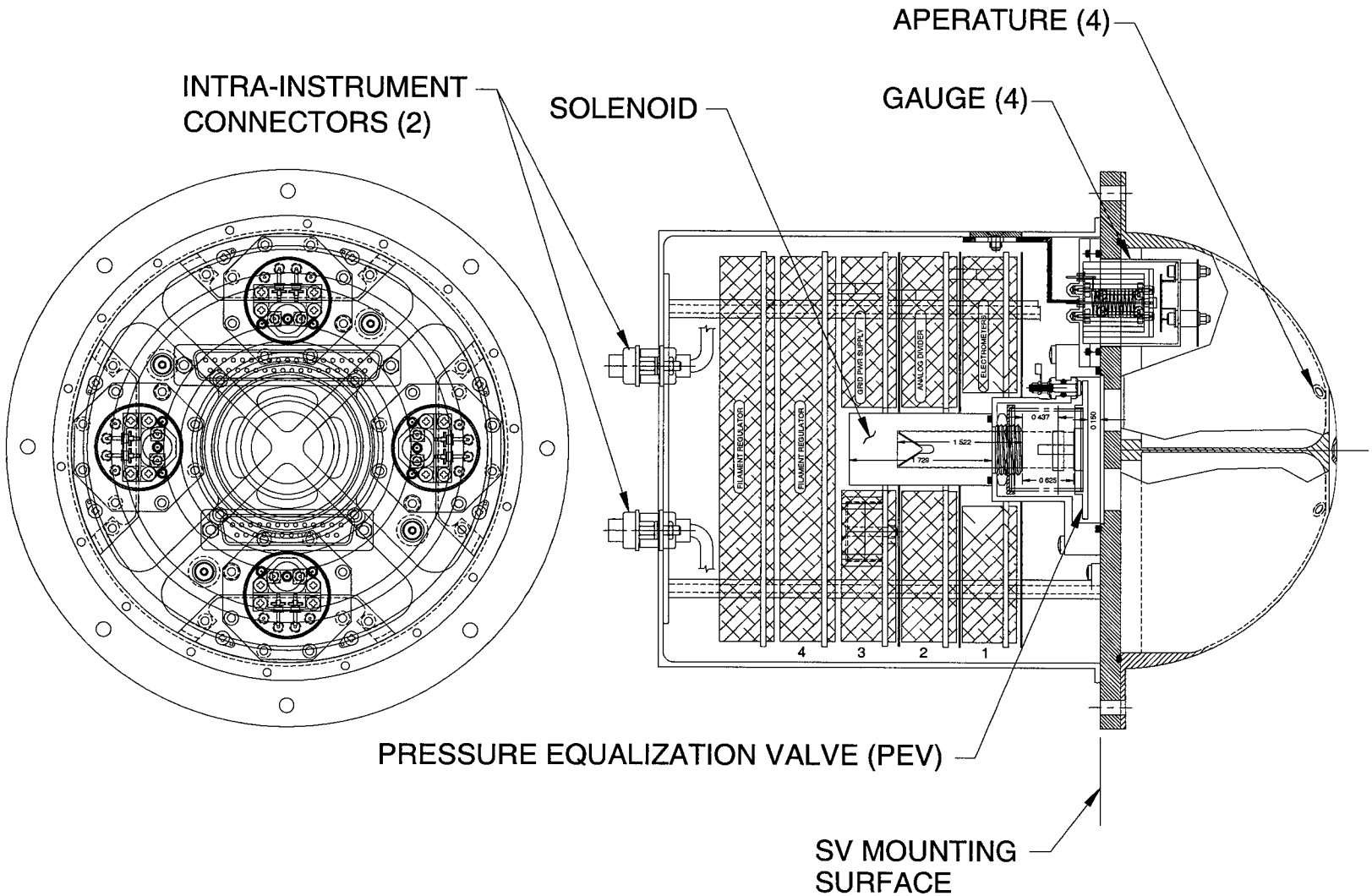

XTRK PEV DETAILS

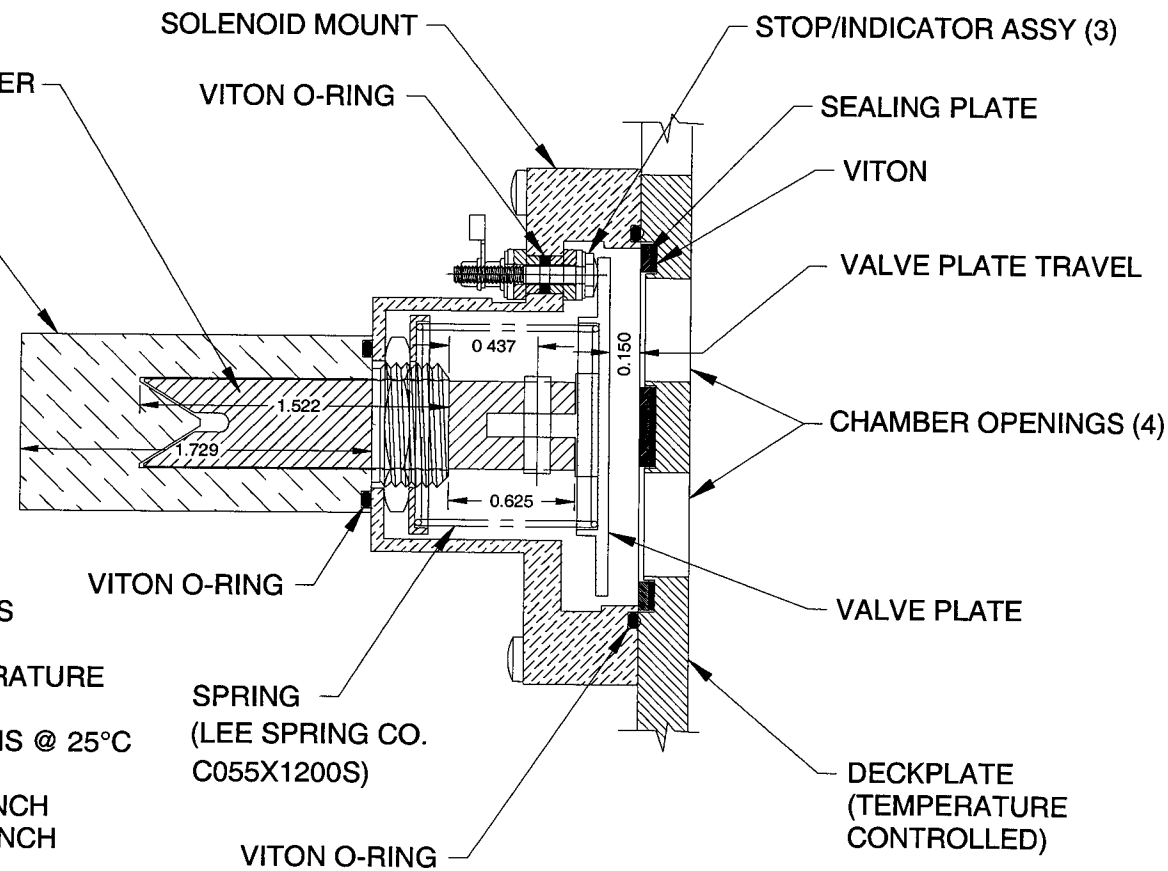

SOLENOID-
- VACUUM SEALED
- SPACE QUALIFIED MATERIALS
- MICROSEAL PLUNGER LUBE
- THERMALLY TIED TO TEMPERATURE CONTROLLED DECKPLATE
- RESISTANCE 176.4/215.6 OHMS @ 25°C
- FORCES-
  PULL- 0.46 LBS. MIN @ 0.20 INCH
  HOLD- 0.60 LBS. MIN @ 0.05 INCH

SPRING-
- 3.5 LB/IN RATE
- WIRE DIA.- 0.054 INCH
- O.D.- 1.0 INCH
- STAINLESS STEEL

XTRK ION GAUGE X-SECTION

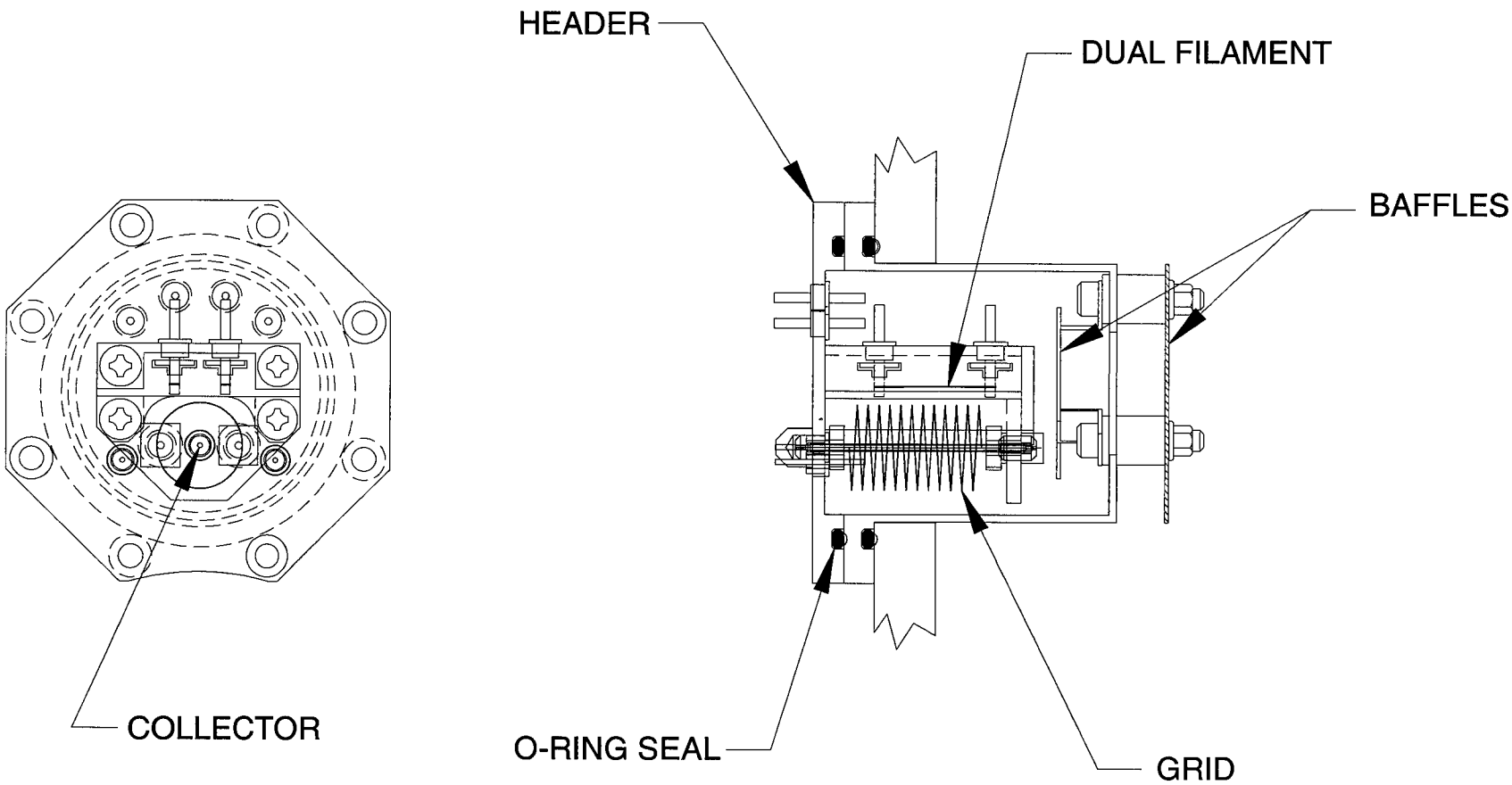

NWM RAM WIND SENSOR OUTLINE/INTERFACE

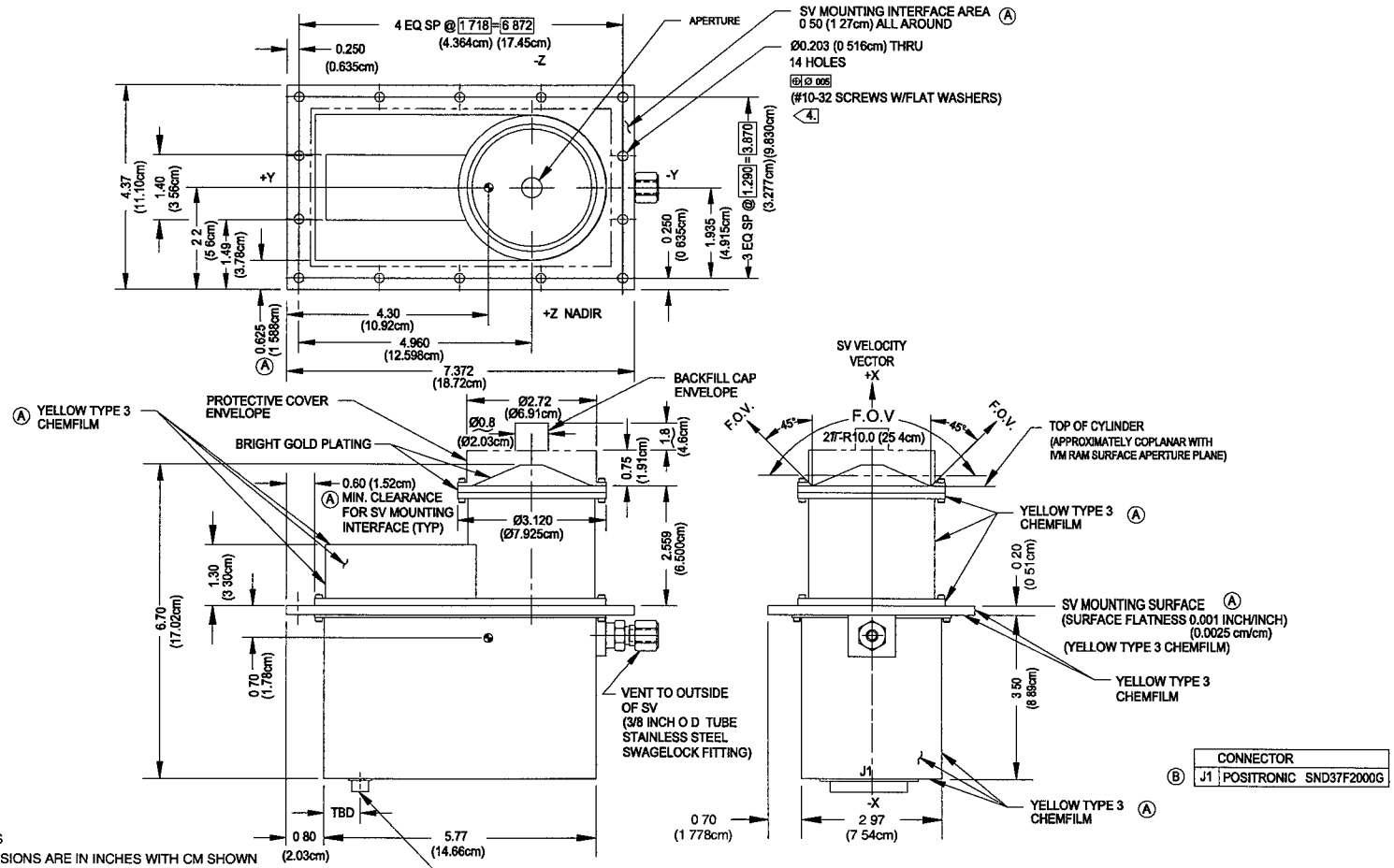

NOTES
1. DIMENSIONS ARE IN INCHES WITH CM SHOWN IN () UNLESS OTHERWISE NOTED
2. ⊕ CENTER OF MASS ESTIMATE
3. SURFACE FINISHES ARE INDICATED IN FIELD OF DRAWING.
4. LOCKING NUTS OR INSERTS IN SV- TORQUE 35 IN-LB OVER LOCK RESISTANCE.

NWM RWS X-SECTION

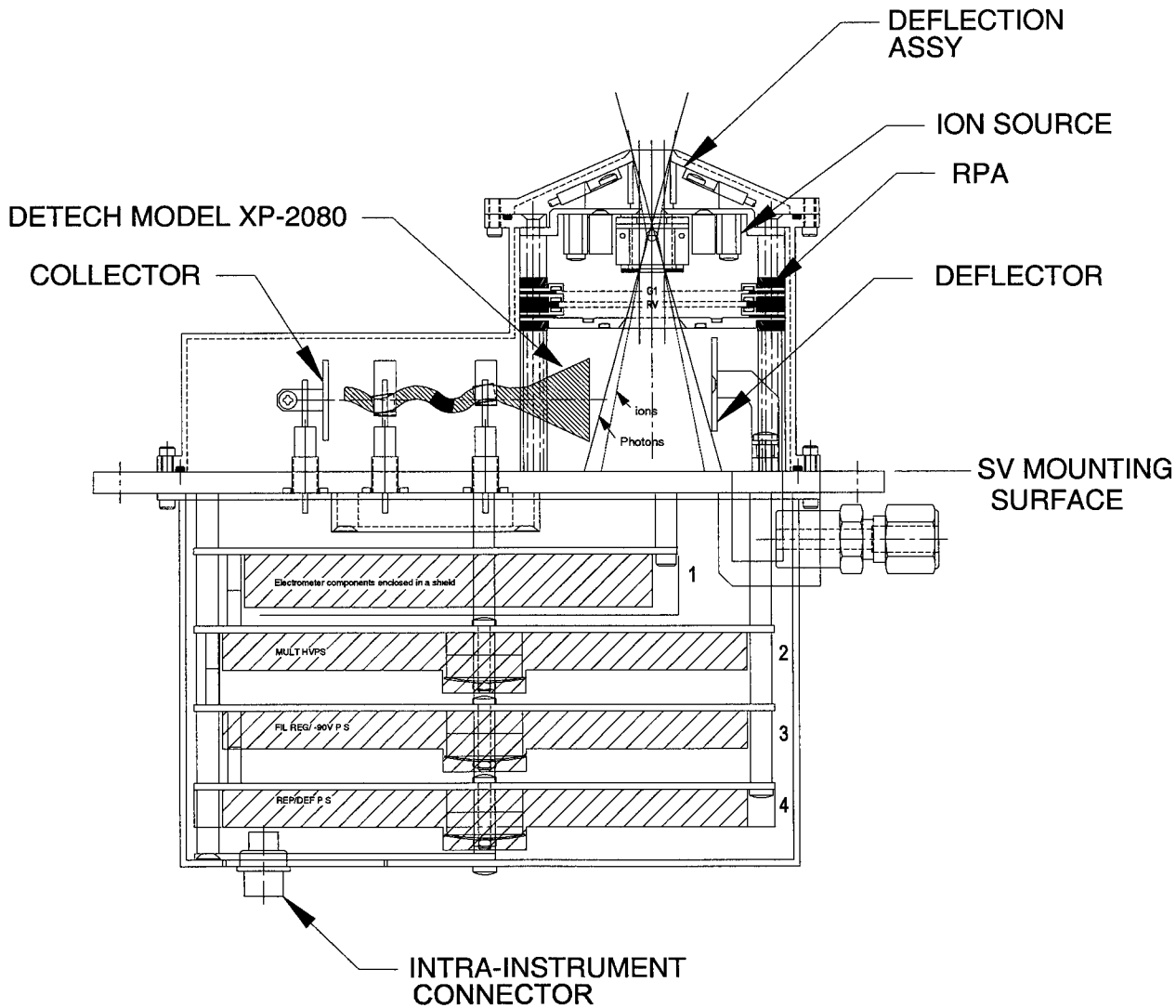

NWM ELECTRONICS OUTLINE/INTERFACE

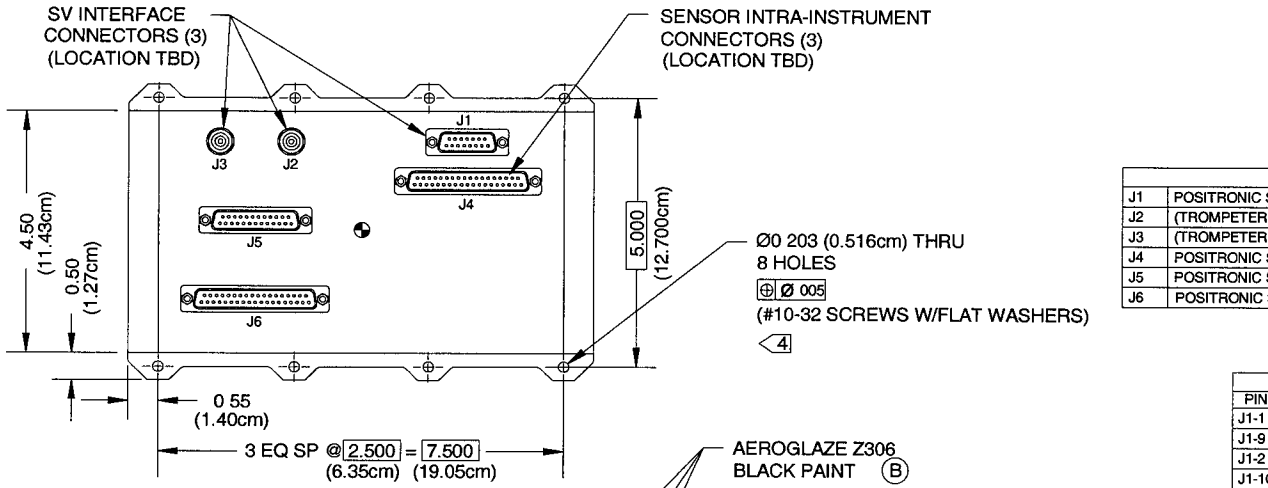

CONNECTORS		
J1	POSITRONIC SND15M2000G	(PWR / TLM)
J2	(TROMPETER BJ3157)	
J3	(TROMPETER BJ3157)	
J4	POSITRONIC SND37M2000G	(RWS I/F)
J5	POSITRONIC SND25F2000G	(CTS ELECT I/F)
J6	POSITRONIC SND37F2000G	(CTS GAUGE I/F)

J1 PIN / FUNCTION	
PIN	FUNCTION
J1-1	+28V LOW VOLTAGE ON
J1-9	+28V LOW VOLTAGE ON RET
J1-2	+28V FILAMENT POWER ON
J1-10	+28V FILAMENT POWER RET
J1-3	+28V PEV POWER ON
J1-11	+28V PEV POWER RET
J1-8	NWM TEMP (ANALOG TM)
J1-15	NWM ANALOG TM RET

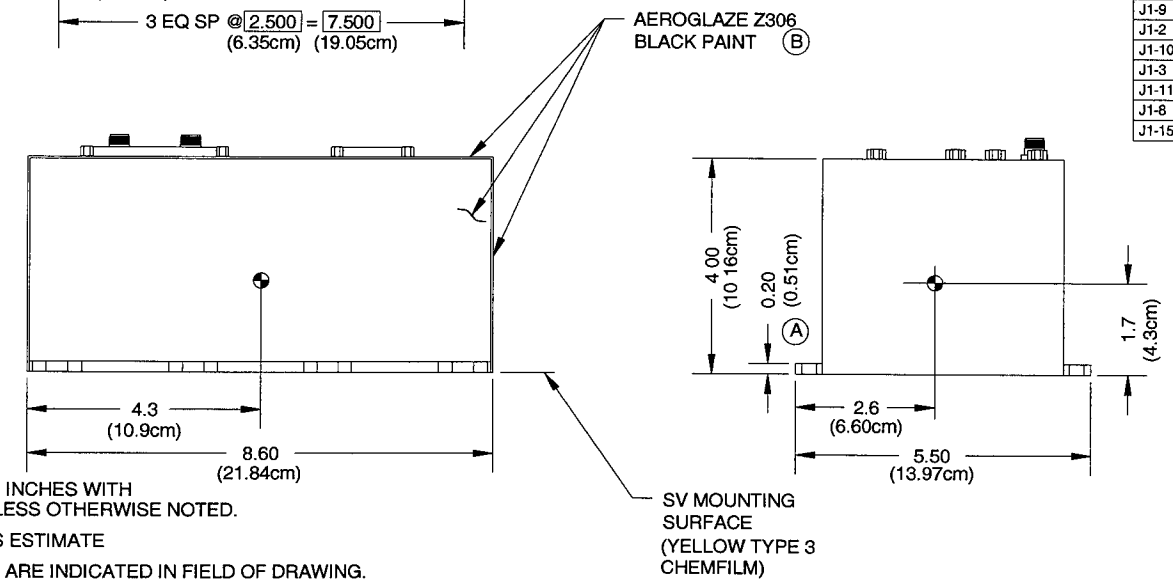

NOTES:
1. DIMENSIONS ARE IN INCHES WITH cm SHOWN IN () UNLESS OTHERWISE NOTED.
2. CENTER OF MASS ESTIMATE
3 SURFACE FINISHES ARE INDICATED IN FIELD OF DRAWING.
4 LOCKING NUTS OR INSERTS IN SV- TORQUE 35 IN-LB OVER LOCK RESISTANCE.

NWM ELECTRONICS X-SECTION

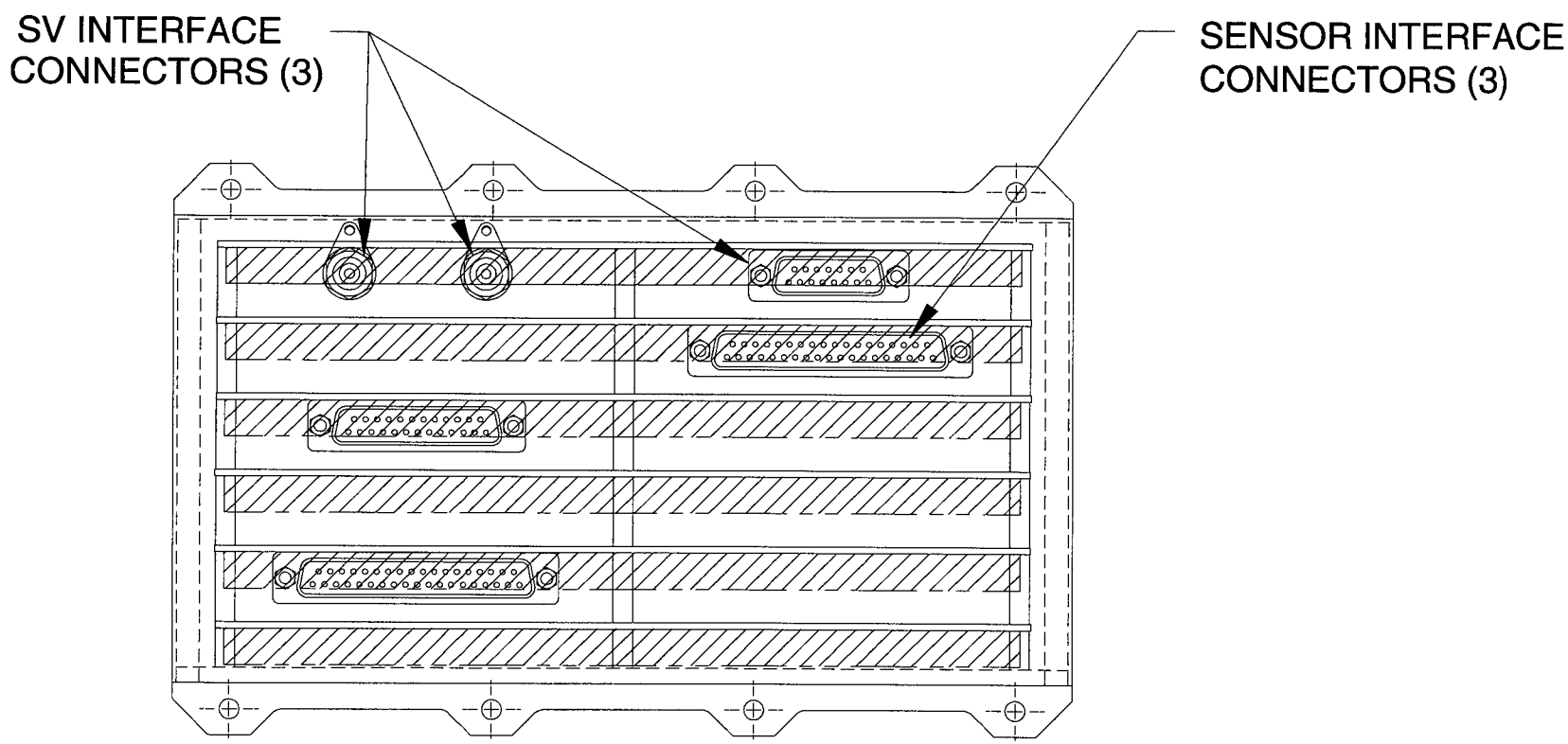

NWM HIGH LEVEL DRAWING TREE

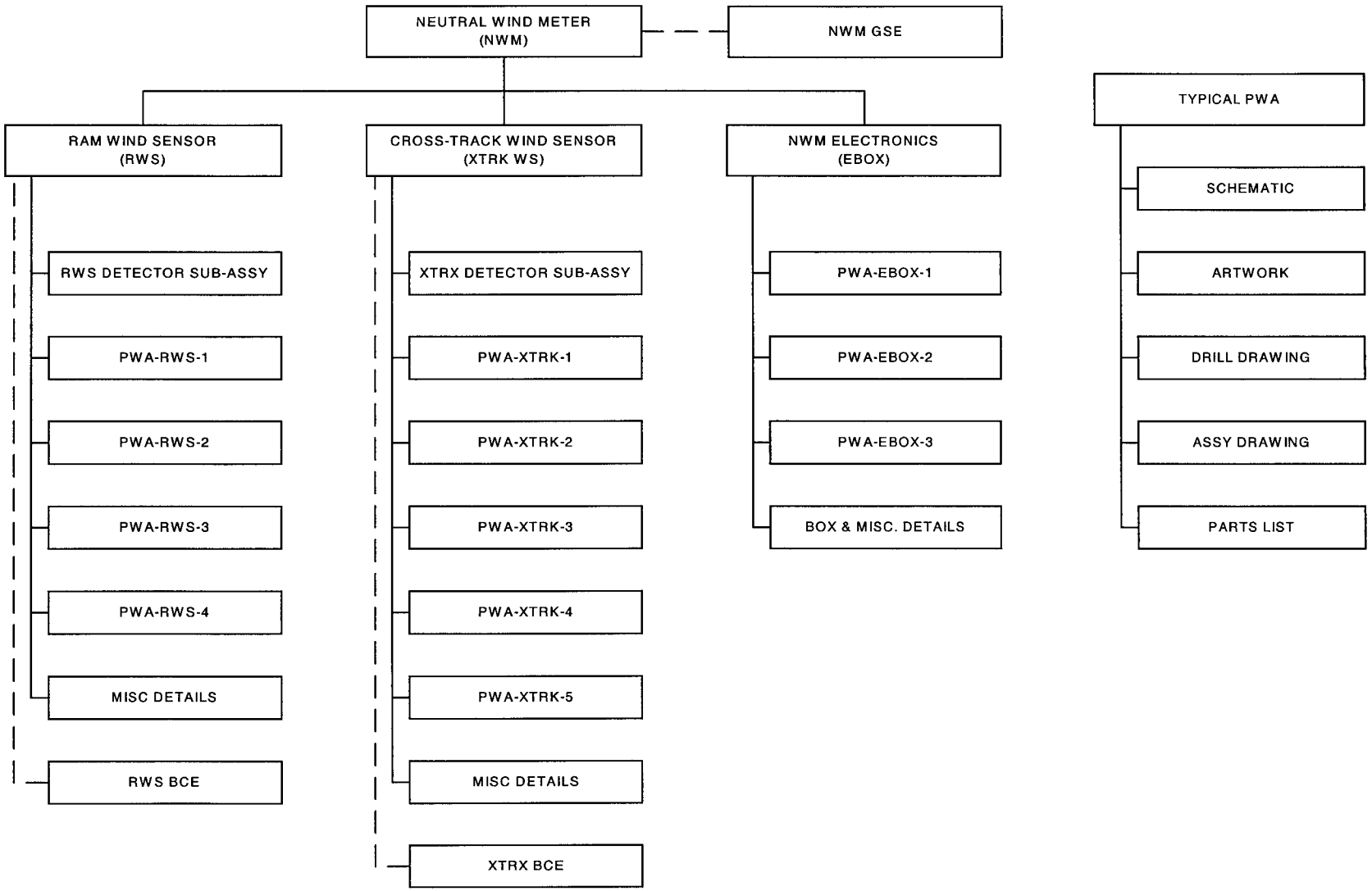

IVM/NWM INSTRUMENT SUMMARY 1

- Mass Estimates

IVM Total -	2.6kg	
NWM RWS -	1.6kg	
NWM XTRKS -	2.0kg	
NWM EBox -	2.2kg	
NWM Cables -	0.2kg	(depends on length)
NWM Total -	6.0kg	

  - 20% mass margin held by project - not UTD

- Thermal Dissipation Estimates (Typical Power)
  - IVM Package - 1.5W
  - NWM RWS Package - 2.9W
  - NWM XTRKS Package - 7.4W
  - NWM EBox Package - 1.8W
  - NWM Total - 12.1W

IVM/NWM INSTRUMENT SUMMARY 2

- Flight Temperature Limits
  - Operation: -10C to +40C (ram aperture -40C to +100C)
  - Survival: -30C to +60C (ram aperture -40C to +100C)
- Pointing Alignment
  - Accuracy: 2 degree wrt velocity vector
  - Knowledge: 0.1 degree
  - One moving part: Pressure Equalization Valve(PEV) in CTS

IVM/NWM MECHANICAL ANALYSES

- Dynamics Analysis
  - Determine fundamental frequency of system and major components, especially PWAs
- Stress Analysis
  - Limited to major points
  - Flight heritage/experience utilized
- Thermal Analysis
  - Internal only
  - Based on SV control of mounting surfaces

IVM/NWM DYNAMICS (MODAL) ANALYSIS

- ICD requirements: System $f_N > 100$ Hz
  - Structural model not required
- Design goals:
  - Acceptable PWA deflection at design loads
  - Stiffness designed into structures/subassy mounting
- PWA assembly deflections examined for random vibration and pyroshock condition

PWA DYNAMICS AND APPROACH

- High PWA f_N's
  - Analysis shows all boards > 180 Hz
- Octave rule for separating PWA and structure f_N (Steinberg)
- Bond large components to PWB's
- Lead strain relief
- Analysis approach
  - Find PWA mode shape (FEA)
  - Calculate curvature of PWA (based on FEA stresses)
  - Calculate relative displacement between board and component
  - Find fatigue strength
    - Primarily looking at component leads and solder connections

CINDI
IVM/NWM

DYNAMIC RESONANCE AND RESPONSE FOR PROTOFLIGHT VIBRATION

C/NOFS

Instrument	Item	Mass Partic. (lbs)	Natural Freq (Hz)	Estimated Vibe Q	Single DOF Response (GRMS)
XTRK	PWB 1	0.234	280	13.3	15.3
XTRK	PWB 2	0.242	283	13.4	15.4
XTRK	PWB 3	0.242	283	13.4	15.4
XTRK	PWB 4	0.253	288	13.6	15.7
XTRK	PWB 5	0.253	288	13.6	15.7
XTRK	baseplate	4.41	1062	18.3	34.9
XTRK	PWB Assy	1.469	190	13.8	12.8
RWS	PWB 1	0.150	183	13.5	12.5
RWS	PWB 2	0.182	183	13.5	12.5
RWS	PWB 3	0.182	183	13.5	12.5
RWS	PWB 4	0.182	183	13.5	12.5
RWS	baseplate	3.53	525	22.9	27.5
IVM	PWB 1	0.382	301	17.3	18.1
IVM	PWB 2	0.382	301	17.3	18.1
IVM	PWB 3	0.322	313	17.7	18.6
IVM	baseplate	5.73	624	25.0	31.3
EBOX	PWB 1	0.322	195	14.0	13.1
EBOX	PWB 2	0.322	195	14.0	13.1
EBOX	PWB 3	0.322	195	14.0	13.1
EBOX	PWB 4	0.322	195	14.0	13.1
EBOX	PWB 5	0.322	195	14.0	13.1
EBOX	baseplate	4.85	402	20.0	22.5

IVM/NWM STRUCTURAL DESIGN

- Structural design based on past flight instrument heritage
- Bolt together structures (no welding)
- Conservative margins based on yield strengths
- Fundamental frequency >100Hz
- Fracture control and stress corrosion cracking considered (safe materials - no weldments)
- Primary materials
  - 6061 - T651 aluminum
  - 300 series stainless steel
  - PCTFE (Kel-F)

IVM/NWM STRESS APPROACH

- Stress analysis preformed on critical and interface items
- Loading based on ICD requirements
- Minimum safety factors (per ICD)
  - 1.25 for yield loads
  - 1.40 for ultimate loads
- Fracture control and stress corrosion cracking considered (safe materials - no weldments)
- No mass and form/fit model planned
- Footprint fit template planned.
- No other packages may be mounted to IVM/NWM packages

STRESS ANALYSIS RESULTS TYPICAL SAMPLES

- Input levels per PLITP
- Factor of safety = 1.25 for yield strength at PF levels
  - Factor of safety = 1.40 for ultimate strength at PF levels
  - Fatigue for 1844 seconds at PF levels
- References:
  - Pyrotechnic Shock Design Guidelines Manual, Contract NAS5-15208
  - Vibration Analysis for Electronic Equipment, 3rd edition, by D.S. Steinberg
- Results Samples:

INSTRUMENT	ITEM	LOAD	INPUT LEVEL	M.S.	CRITERIA
XTRK	PWB COVER/CAN	SHOCK	2000G	6.99	YIELD
XTRK	PWB STANDOFFS	VIBE	9 GRMS	0.37	FATIGUE
XTRK	PWB COMPONENT	VIBE	9 GRMS	0.89	FATIGUE
XTRK	PWB COMPONENT	VIBE	9 GRMS	0.36	FATIGUE
IVM	PWB COMPONENT	THERMAL	(-24 to +61)C	HIGH	FATIGUE
IVM	PWB COMPONENT	THERMAL	(-24 to +61)C	HIGH	FATIGUE
IVM	PWB COMPONENT	VIBE	9 GRMS	0.77	FATIGUE
IVM	PWB COMPONENT	VIBE	9 GRMS	0.06	FATIGUE

IVM/NWM THERMAL DESIGN

- Design goal: Component $T_J \leq 100C$ (Digital), $\leq 93.5C$ (Linear)
- Conduction utilized where possible

COMPONENTS	→	PWA	→	CHASSIS	→	SPACE VEHICLE
Lead composition Thermal epoxy Heat sinks		Critical PWA's clamped to chassis		Aluminum 6061-T6 Plates		Chassis bolted to spacecraft

- Thermal finishes and MLI coordinated with SA
- Heaters may be placed on instruments by SA if required
- Instruments contain internal housekeeping temperature monitors. External monitors may be placed on the instrument by SA to control instrument baseplate temperature
- Critical components heat-sunk to chassis

IVM/NWM THERMAL ANALYSIS 1

- Analysis is complete
- Modeling using TAK-2000 software
- Monitoring SA predictions (0 Beta Angle, Ascent Heating)
- Taking worst case approach (geometry, power, properties, etc.)
- Identifying critical components
- Goal: Decrease T_J in critical components to improve performance
  - Digital components - $T_J \leq 100C$
  - Linear components - $T_J \leq 93.5C$

  } Per PPL 21
- Temperature Parameters
  - -10C to +40C Operating (exposed ram aperture -40C to +100C)
  - -30C to +60C Survival (exposed ram aperture -40C to +100C)
  - -24C to +61C Test operating (per ICD's) (see note)

NOTE: Analysis completed prior to modification of operating test temperatures to -20C to +50C by Air Force PLITP.

IVM/NWM THERMAL ANALYSIS 2

- Assumed SV coldplate temperature -10C to +40C for flight, -24C to +61C for test (see note)
- IVM/NWM conductively coupled to SV coldplate (RSAP)
- Thermal finishes coordinated with SA
- Flight condition is worst case (vs test condition)
  - Using derated T_J for flight condition
  - Using manufacturer T_J (not derated) for higher temperature test condition
  - Example: Part # BU65142

$T_{J\,MAX}$ = 150C	$T_{J\,MAX}$ = 100C
$T_{COLDWALL}$ = 61C for testing	$T_{COLDWALL}$ = 40C for flight
Allowable ΔT = 89C	Allowable ΔT = 60C

- Components with T_J over limit will be conductively coupled to package/coldplate wall to meet requirement

NOTE: Analysis completed prior to test temperature modifications

IVM/NWM THERMAL ANALYSIS 3

- Worst cast analysis completed utilizing max component power (vs. typical) and radiative coupling only (no conduction)
- One component (BU65142) identified as requiring conductive coupling to chassis
- All other components below max derated T_j limits

THERMAL ANALYSIS NOTES

- TAK Model thermal notes:
  - No radiation interaction with S/C
  - Primary heat path
    - Electronic component to PWB via radiation (conduction used for heat spreading into local PWB)
    - PWB to box wall via radiation
    - BOX wall to RSAP via conduction
  - PWB is epoxy fiberglass with no appreciable copper
    - Emissivity = 0.89 (Satellite Thermal Control Handbook) (however, some PWBs are conformally coated, therefore use 0.8)
  - Internal box wall is painted with black Z306 paint, 3 mils thick
    - Emissivity = 0.88 (Satellite Thermal Control Handbook)
  - Typical heat path
    - Junction to Case - Vendor data derived from derating info or MIL-M-38510
    - Case to Sidewall - Radiation
    - Case to Local PWB - Radiation
    - Case to Local PWB - Conduction through leads with constriction effects and spreading resistance
    - Case to Adjacent PWB or Partition - Radiation

THERMAL ANALYSIS RESULTS
NWM - XTRK

PWB #	Average PWB (C)	Part #	Max Pwr (W)	Tj (C) 40C RSAP	Tj (C) 61C RSAP
1	77.9	OPA128	0.049	91.1	106.4
1	77.9	LM108AZ	0.011	79.4	94.7
2	63.1	LM108AZ	0.011	65.5	83.3
3	63.2	SG1524B	0.144	91.9	107.4
3	63.2	LM108AZ	0.011	65.9	83.7
4	62.8	LM108AZ	0.011	64.1	82.0
4	62.8	SG1524B	0.144	89.9	105.7
5	57.8	LM108AZ	0.011	57.1	76.0
5	57.8	SG1524B	0.144	84.5	101.0

THERMAL ANALYSIS RESULTS
NWM - RWS

PWB #	Average PWB (C)	Part #	Max Pwr (W)	Tj (C) 40C RSAP	Tj (C) 61C RSAP
1	48.3	OPA128	0.049	76.0	92.1
1	48.3	LM108AZ	0.011	53.2	72.5
1	48.3	LM193AN	0.015	55.0	73.8
2	48.7	7672ARP	0.179	80.5	96.4
3	49.7	AD584	0.015	79.5	95.5
4	45.9	LM108AZ	0.011	80.2	96.1

THERMAL ANALYSIS RESULTS
NWM - EBOX

PWB #	Average PWB (C)	Part #	Max Pwr (W)	Tj (C) 40C RSAP	Tj (C) 61C RSAP
1	64.3	LM108AZ	0.011	66.0	84.2
1	64.3	7545ARP	0.010	65.9	84.3
1	64.3	HA2640	0.160	91.4	107.6
1	64.3	MCH2815D	0.080	71.7	89.1
1	64.3	FMSA461	0.050	87.0	102.7
1	64.3	MCH2812S	0.250	90.0	105.3
1	64.3	MCH2805S	0.220	87.9	103.4
2	60.9	LM108AZ	0.011	63.6	82.2
2	60.9	7545ARP	0.010	63.5	82.4
2	60.9	AD584	0.015	66.9	85.3
3	60.6	LM193AN	0.015	68.2	86.2
3	60.6	BU65142	0.590	57.9	78.9
3	60.6	QTAC22	0.030	NA	NA

THERMAL ANALYSIS RESULTS
ION VELOCITY METER

PWB #	Average PWB (C)	Part #	Max Pwr (W)	Tj (C) 40C RSAP	Tj (C) 61C RSAP
1	58.0	OPA128	0.049	82.9	95.8
1	58.0	LM108AZ	0.011	61.5	79.4
1	58.0	LM193AN	0.015	63.0	80.7
2	58.1	7672ARP	0.179	89.2	106.3
2	58.1	AD584	0.015	65.0	82.8
2	58.1	LM108AZ	0.011	73.0	89.6
2	58.1	7545ARP	0.010	59.5	78.1
2	58.1	MCH2815D	0.130	71.9	88.6
2	58.1	MCH2812S	0.240	84.4	99.6
2	58.1	MCH2805S	0.210	81.9	97.5
3	52.8	BU65142	0.590	58.5	79.5

BU65142 DEVICE CONDUCTIVE HEAT SINK

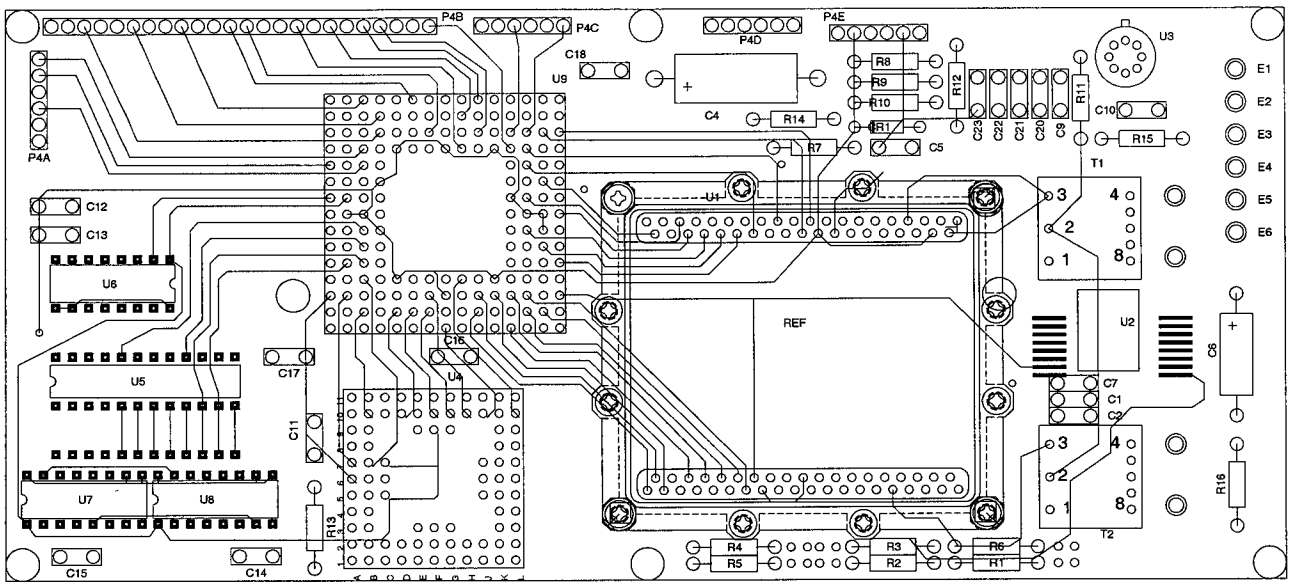

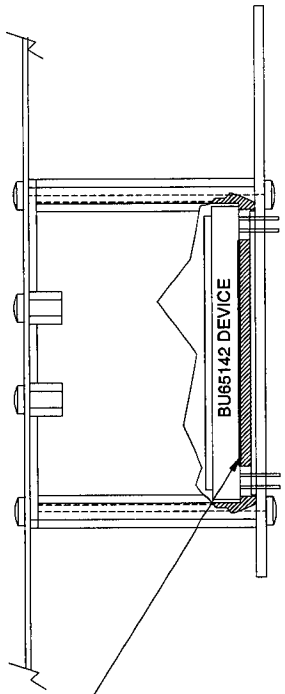

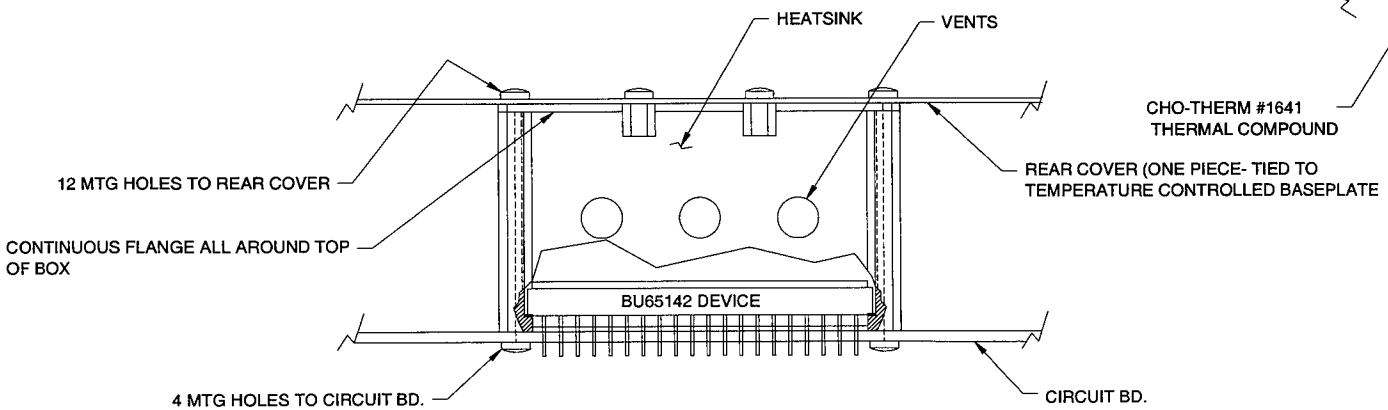

RAM PLATE ANALYSIS
CURRENT DESIGN

RSAP Plate	40	29.4	4.5
PLP Mount Flange	40	30.2	21.2
DIDM Mount Flange	40	31.2	23.2
IVM Mount Flange	40	24.7	15.9
NWM Cross Track Mount Flange	40	25.1	9.6
NWM In Track	40	13.2	8.7

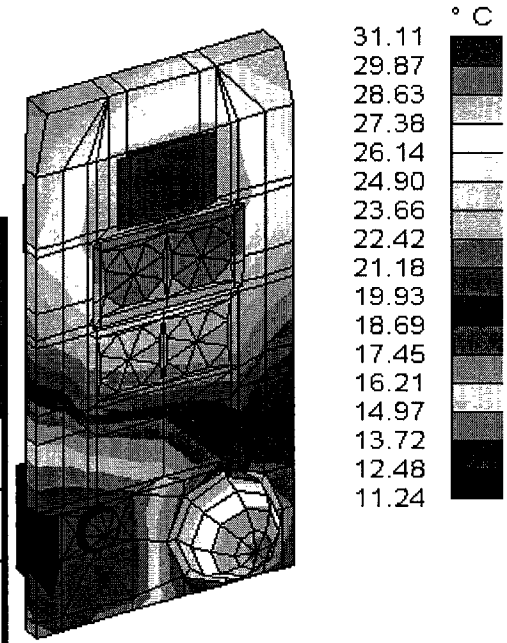

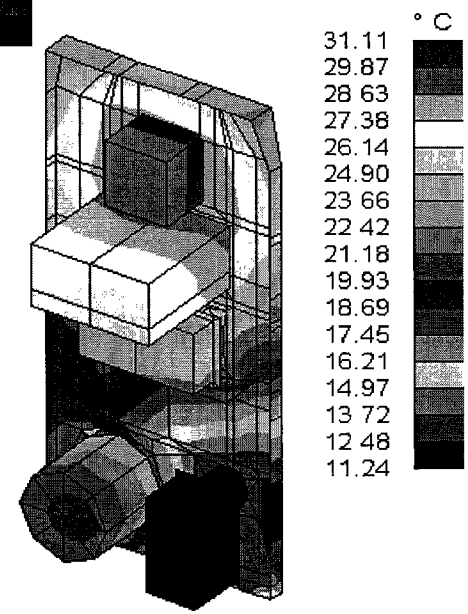

ELECTRICAL DESIGN

IVM FUNCTIONAL DIAGRAM

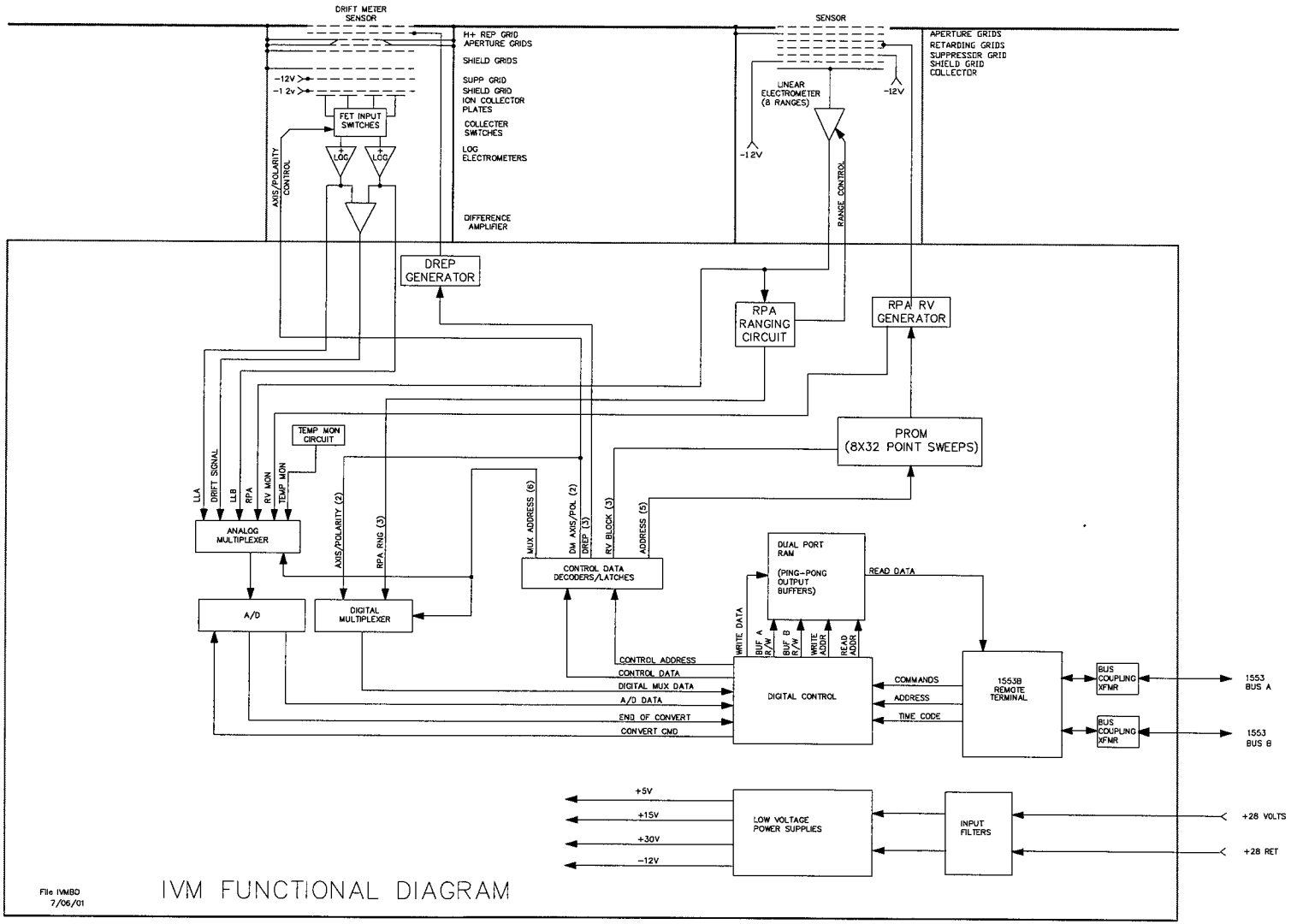

NWM FUNCTIONAL DIAGRAM SHEET 1

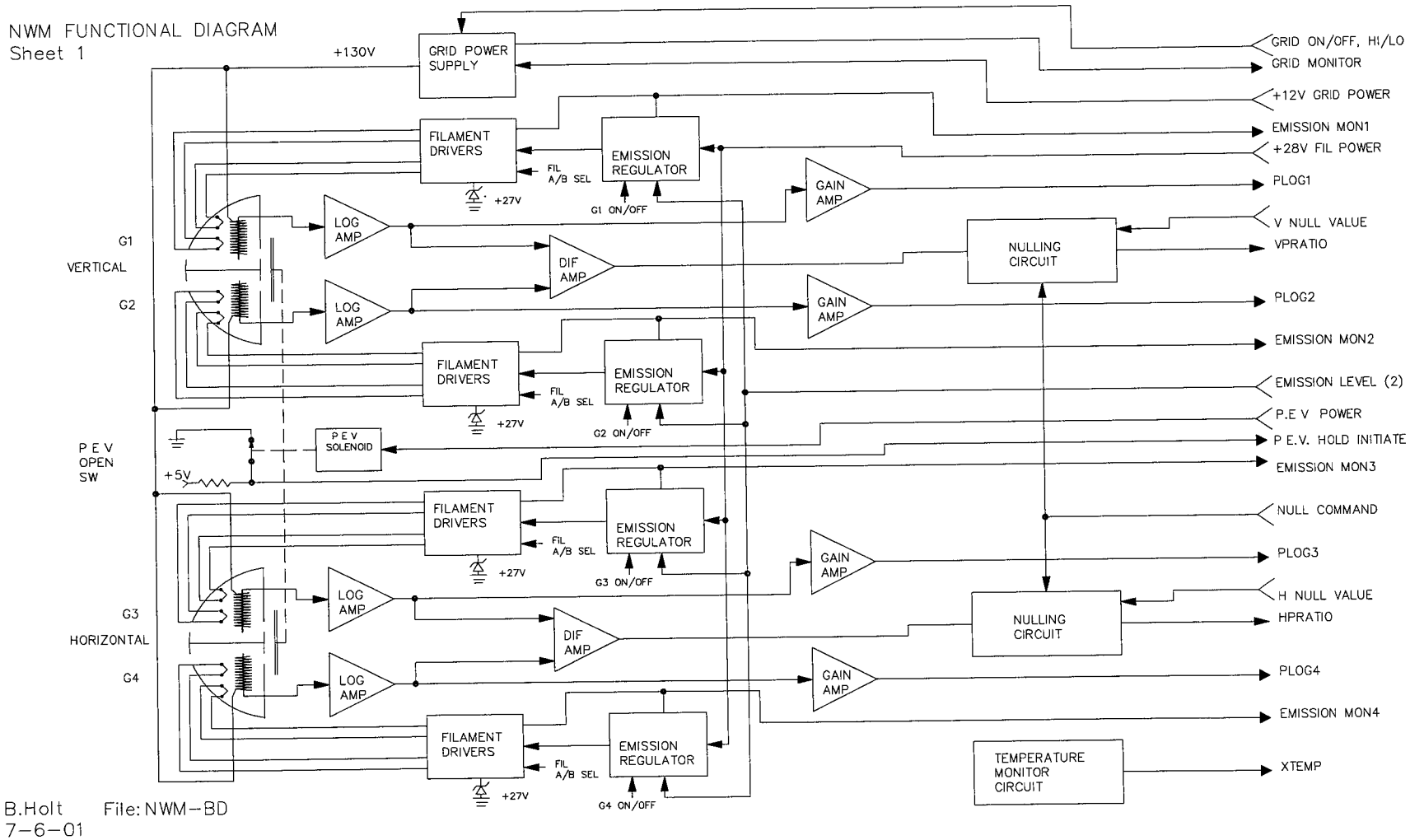

NWM FUNCTIONAL DIAGRAM SHEET 2

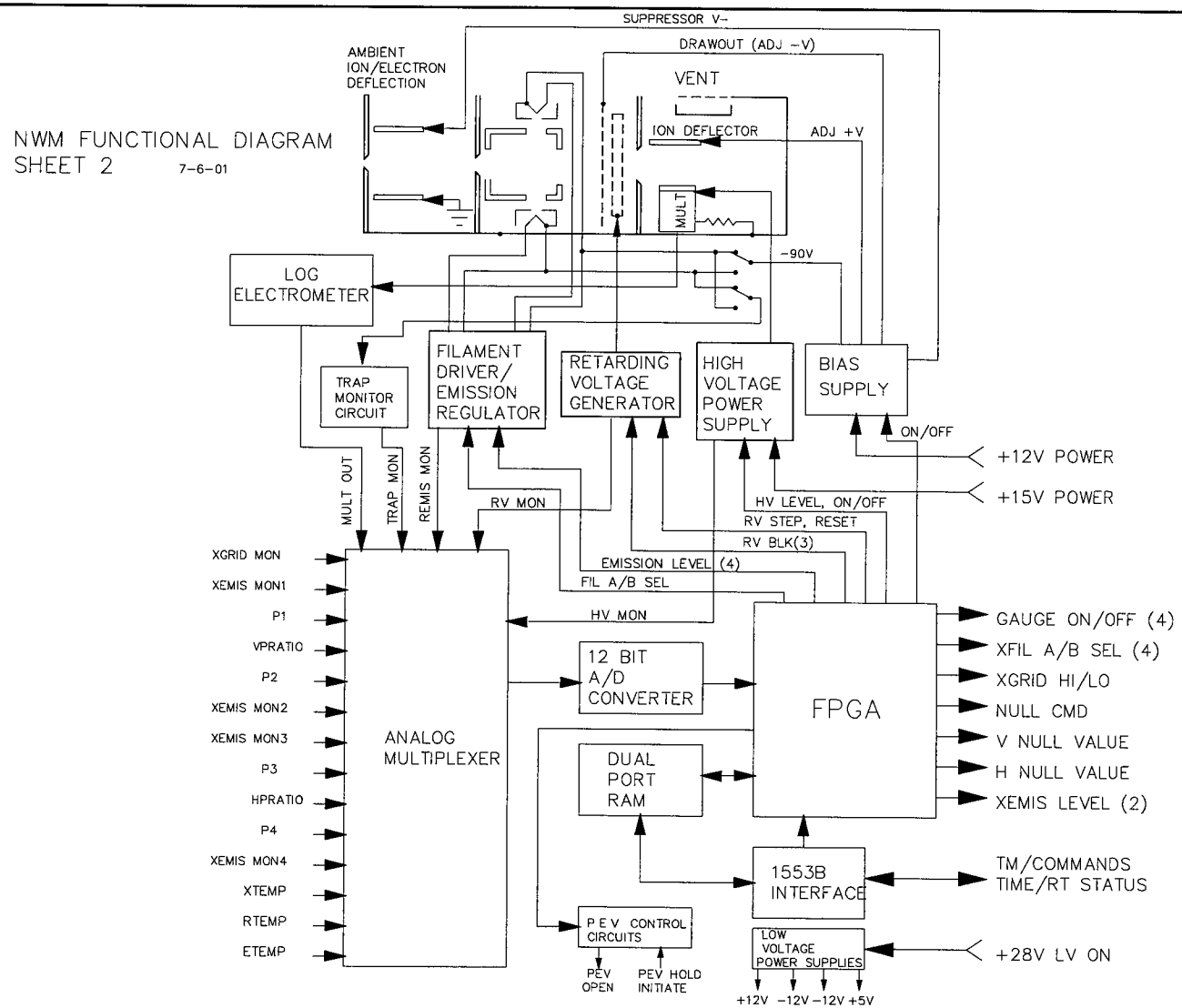

ELECTRICAL - POWER

POWER COMMAND	NOMINAL POWER ESTIMATE
IVM +28V ON (3 AMP FUSE)	2 watts constant, no standby/warm-up
NWM +28V Primary (3 AMP FUSE)	13 watts (< 3 watts in standby)
NWM +28V PEV ON (3 AMP FUSE)	PEV solenoid energized for 16 seconds each 512 seconds (nominal): 4 watts for 50 msecs, then 1 watt for remainder of 16 second hold period
NWM +28V Redundant (3 AMP FUSE)	13 watts (< 3 watts in standby)

IVM/NWM POWER REGULATION/DISTRIBUTION

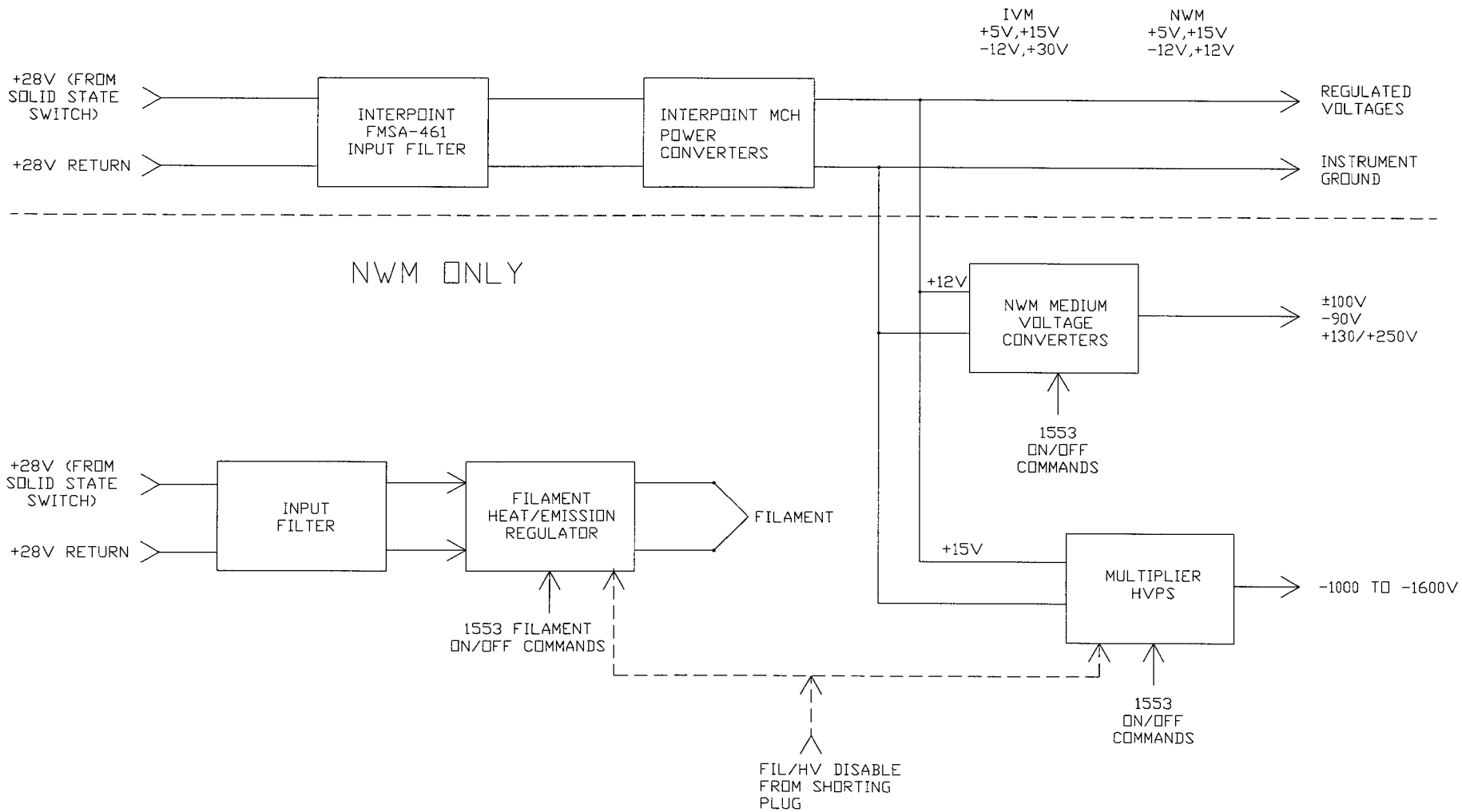

CINDI IVM/NWM

IVM POWER ESTIMATE

C/NOFS

					TOTAL - TYPICAL					TOTAL - MAX			
	I (ma)	I (ma)		QTY	I (ma)	I (ma)	I (ma)	I (ma)		I (ma)	I (ma)	I (ma)	I (ma)
PART	TYP	MAX		USED	+5V	+15V	-12V	+30V		+5V	+15V	-12V	+30V
LM108A	0.15	0.40		8		1.20	1.20				3.20	3.20	
OPA128	0.90	1.80		3		2.70	2.70				5.40	5.40	
LM193	0.40	1.00		2		0.80					2.00		
HA2640	3.20	3.80		1			3.20	3.20				3.80	3.80
AD584	0.75	1.00		1		0.75					1.00		
7672ARP	4.30	7.00		1	4.30					7.00			
	7.40	12.00					7.40					12.00	
7545ARP	0.50	2.00		1	0.50					2.00			
QTAC22	6.00	6.00		1	6.00					6.00			
BU65142	50.00	115.00		1	50.00					115.00			
	30.00	60.00		1			30.00					60.00	
MISC CMOS	30.00	30.00			30.00					30.00			
TOTAL WITHOUT EFF. LOSSES			(ma)		90.80	5.45	44.50	3.20		160.00	11.60	84.40	3.80
	LOAD	LOAD		LOSS	LOSS			SUM	SUM				
	W-TYP	W-MAX		W-TYP	W-MAX			**TYP**	**MAX**				
MCH 2815D	0.18	0.29		0.09	0.13			0.27	0.42				
MCH 2812S	0.53	1.01		0.17	0.24			0.70	1.26				
MCH2805S	0.45	0.80		0.11	0.21			0.56	1.01				
		IVM	**TOTAL POWER FROM +28V(WATTS)**					1.53	2.68				

CINDI
IVM/NWM

NWM POWER ESTIMATE

C/NOFS

PART	I (ma) TYP	I (ma) MAX	QTY USED	TOTAL - TYPICAL I (ma) +5V	I (ma) +15V	I (ma) -12V	I (ma) +12V	TOTAL - MAX I (ma) +5V	I (ma) +15V	I (ma) -12V	I (ma) +12V
LM108A	0.15	0.40	21		3.15	3.15			8.40	8.40	
OPA128	0.90	1.80	6		5.40	5.40			10.80	10.80	
AD584	0.75	1.00	1		0.75				1.00		
7672ARP	4.30	7.00	1	4.30				7.00			
	7.40	12.00				7.40				12.00	
7545ARP	0.50	2.00	5	10.00				10.00			
SG1524B	5.00	12.00	5				25.00				60.00
QTAC22	6.00	6.00	1	6.00				6.00			
BU65142	50.00	115.00	1	50.00				115.00			
	30.00	60.00	1			30.00				60.00	
MISC CMOS	30.00	30.00		30.00				30.00			
HVPS	MEASURED				23.50				23.50		
GRID PS	MEASURED						20.00				20.00
100V PS	MEASURED						20.00				20.00
-90 PS	MEASURED						14.00				14.00
TOTAL WITHOUT EFF. LOSSES (ma)				100.30	32.80	45.95	79.00	168.00	43.70	91.20	114.00

	LOAD W-TYP	LOAD W-MAX	LOSS W-TYP	LOSS W-MAX	SUM **TYP**	SUM **MAX**
MCH 2815S	0.49	0.66	0.16	0.18	0.65	0.84
MCH 2812S(+)	0.95	1.37	0.27	0.38	1.21	1.75
MCH2812S(-)	0.55	1.09	0.18	0.25	0.73	1.35
MCH2805S	0.50	0.84	0.16	0.22	0.66	1.06
FILAMENTS	(Measured value, 5x.063x28=8.82W)				8.82	8.82
		NWM	**TOTAL POWER FROM +28V(WATTS)**		12.07	13.81

CINDI
IVM/NWM

NWM STANDBY POWER ESTIMATE

C/NOFS

PART	I (ma) TYP	I (ma) MAX	QTY USED	TOTAL - TYPICAL I (ma) +5V	I (ma) +15V	I (ma) -12V	I (ma) +12V	TOTAL - MAX I (ma) +5V	I (ma) +15V	I (ma) -12V	I (ma) +12V
LM108A	0.15	0.40	21		3.15	3.15			8.40	8.40	
OPA128	0.90	1.80	6		5.40	5.40			10.80	10.80	
AD584	0.75	1.00	1		0.75				1.00		
7672ARP	4.30	7.00	1	4.30				7.00			
	7.40	12.00				7.40				12.00	
7545ARP	0.50	2.00	5	10.00				10.00			
SG1524B	5.00	12.00	5				25.00				60.00
QTAC22	6.00	6.00	1	6.00				6.00			
BU65142	50.00	115.00	1	50.00				115.00			
	30.00	60.00	1			30.00				60.00	
MISC CMOS	30.00	30.00		30.00				30.00			
TOTAL WITHOUT EFF. LOSSES (ma)				100.30	9.30	45.95	25.00	168.00	20.20	91.20	60.00

	LOAD W-TYP	LOAD W-MAX	LOSS W-TYP	LOSS W-MAX	SUM **TYP**	SUM **MAX**
MCH 2815S	0.14	0.30	0.04	0.08	0.18	0.39
MCH 2812S(+)	0.30	0.72	0.08	0.20	0.38	0.92
MCH2812S(-)	0.55	1.09	0.18	0.25	0.73	1.35
MCH2805S	0.50	0.84	0.16	0.22	0.66	1.06
		NWM	**STANDBY POWER FROM +28V (W)**		1.96	3.71

IVM/NWM POWER MARGIN ANALYSIS

- IVM+NWM ALLOTMENT (UTD-held) – 16 W
- IVM +NWM PREDICTED
  - Using Typical data sheet specs – 13.61 W
  - Using Max. data sheet specs – 16.5 W
- NWM ICD
  - Peak 15.6 W, Orbit Avg (OAP) 8.4 W
  - NWM is off above about 550 Km.
  - At Max power estimated OAP accommodates 61% on time
  - IVM ICD
  - Peak 3.6 W, Orbit Avg 3 W, Max estimated = 2.68 W

POWER INTERFACE VERIFICATION

- Early analysis of S/C power interface
- C/NOFS Systems Engineer performs early review of IVM/NWM power interface
- Instrument GSE emulates power interface
- Surge/inrush current measurements at UTD
- Most frequent power switching is internal to NWM via 1553
  - Verifiable using GSE
  - Interface verification during payload module testing at AFRL

NWM/IVM GROUNDING DIAGRAM

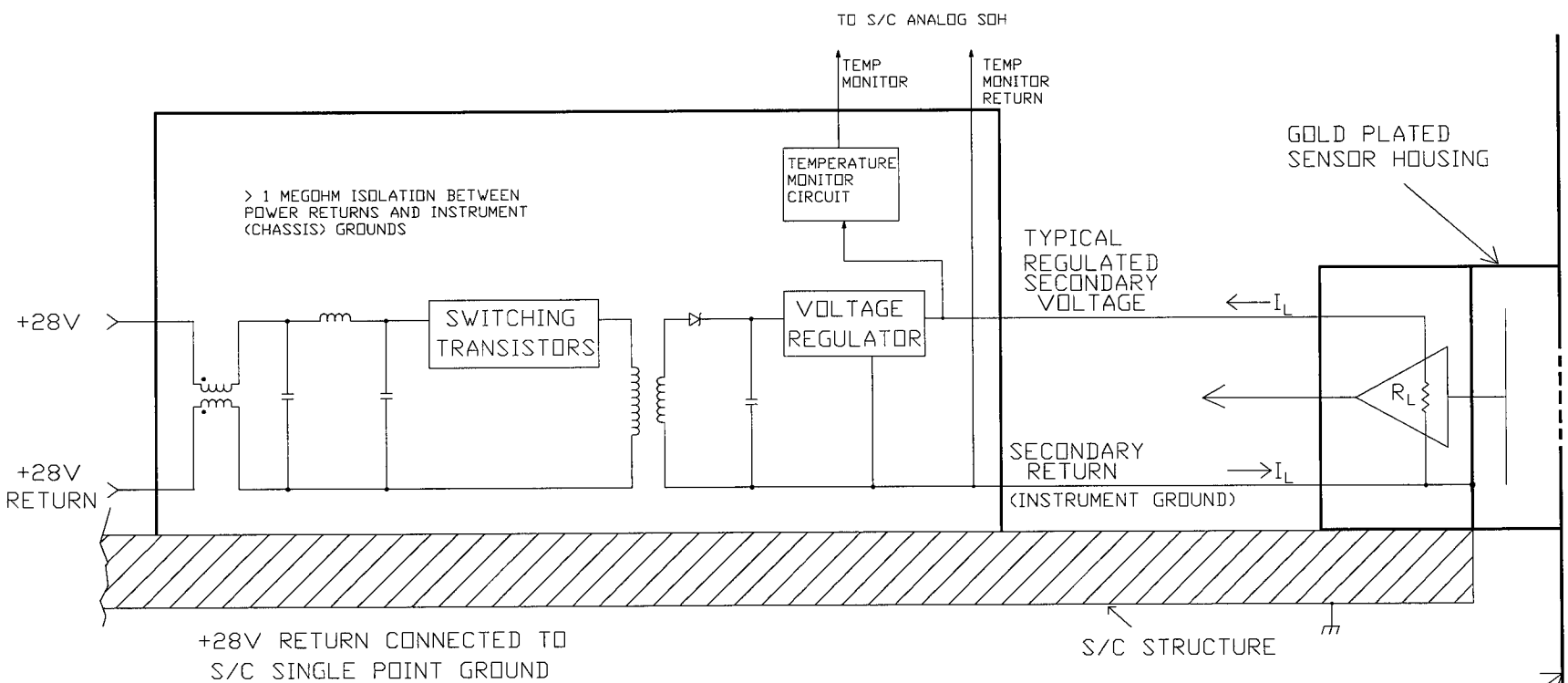

- INSTRUMENT GROUND (SECONDARY RETURN) TIED TO GOLD PLATED SENSOR HOUSING
- GOLD TO GOLD CONTACT BETWEEN SENSOR HOUSING AND RSAP

RSAP (GOLD PLATED)

ELECTRICAL INTERFACE

- 1553 RT
  - DDC BU-65142
  - Bus A/B – 2 ea. Trompeter BJ3157 connectors
- IVM Power/Analog TM – 9 pin D
- NWM Power/Analog TM – 15 pin D
- No GSE/Test Connectors
- Analog TM – 0-5 volt temperature monitor
  - 8 bits minimum resolution
  - Nominal 1 K output impedance

FILAMENT LIFETIME BACKGROUND

- Evaporation rate calculation → 4000+ Days (Kohl, 1967)
- Lab tests at UTD → 280+ Days (Hoffman, Apollo Instruments)
  - Test terminated without failure
- AE-C instruments with same filament survived more than 600 days
- Previous life tests of W-Re filaments in O_2 at flight pressures → 1000+ days (Mauersberger & Olson, 1973)

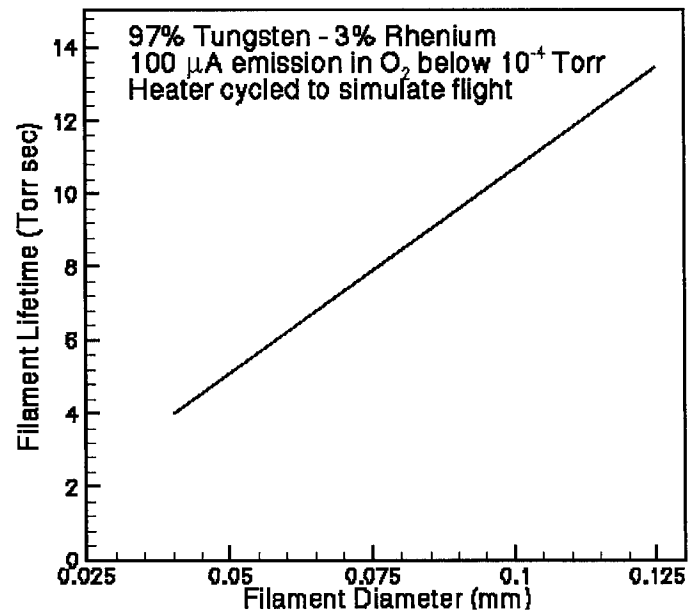

FILAMENT LIFETIME VERIFICATION

- Initial Test
  - Used ion gauge (more UTD experience with the ion source)
  - Established harshest conditions
    - 10e-5 Torr Oxygen-rich atmosphere
    - 100 times higher pressure than average in-flight pressure
  - Filament failed after 2.6 years equivalent CNOFS mission useage
    - Power outage event on day of filament failure
    - PC experienced keyboard failure
  - Testing will continue
    - Test ion source filament configuration

SOLENOID/MULTIPLIER TESTING

XTRK PEV Valve

- Accelerated cycle test in vacuum (equivalent to 3 year mission)
  - 24 actuations/day=8760 actuations/year in flight
  - 28,800 actuations performed in vacuum(3.28 years equivalent)
  - 10,800(1.23 years) at –20C; 10,800 at +50C
  - Protoflight level vibration will be done

RWS Multiplier

- Flight-like mechanical mounting
- Protoflight level vibration will be done

MULTIPLIER LIFETIME

- The lifetime of a conventional multiplier is considered exhausted after 4 Coulombs output is accumulated
- RWS multiplier gain is adjusted for 10e-8 amps max output
- 4 Coulombs accumulation takes about 12 years
- The RWS DeTech Everlast multiplier has a lifetime four times that of the conventional multiplier (based on published test data)
- RWS multipliers are subjected to a burn-in test per the UTD SCD
  - 100 picoamp input, gain = 1000 until gain plateau reached
  - Gain plateau typically occurs at about 0.04 Coulombs

ANALOG CIRCUITS

XTRK-1 SCHEMATIC

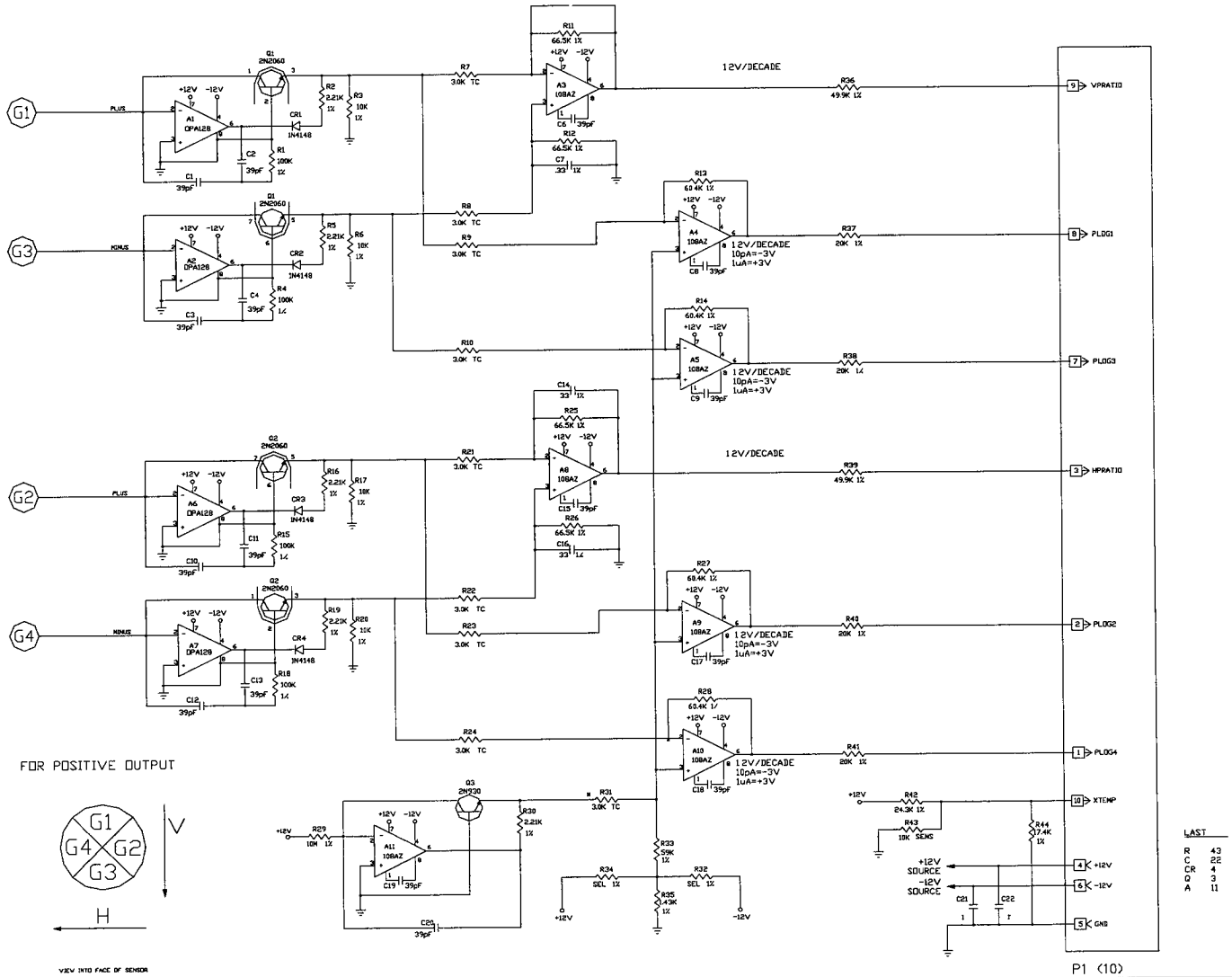

XTRK-2 SCHEMATIC

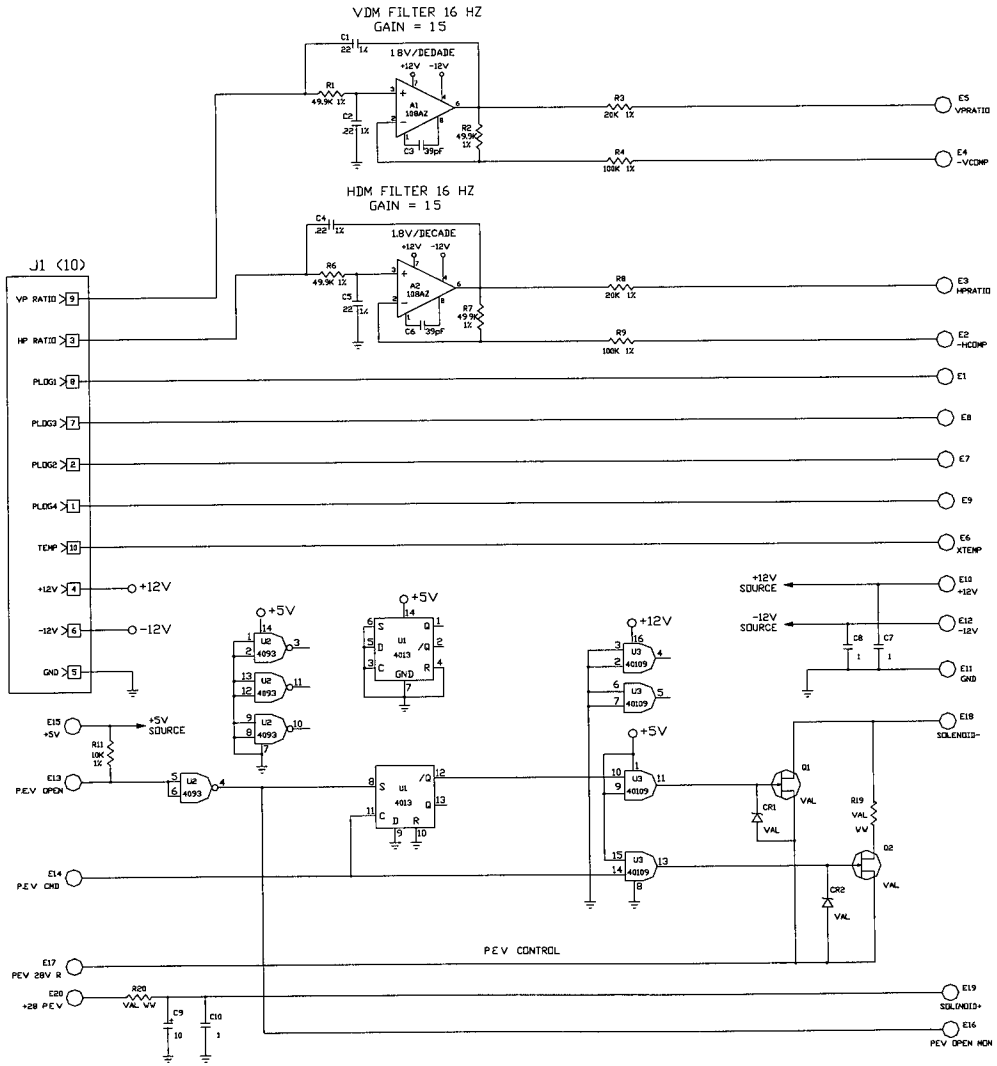

XTRK-3 SCHEMATIC

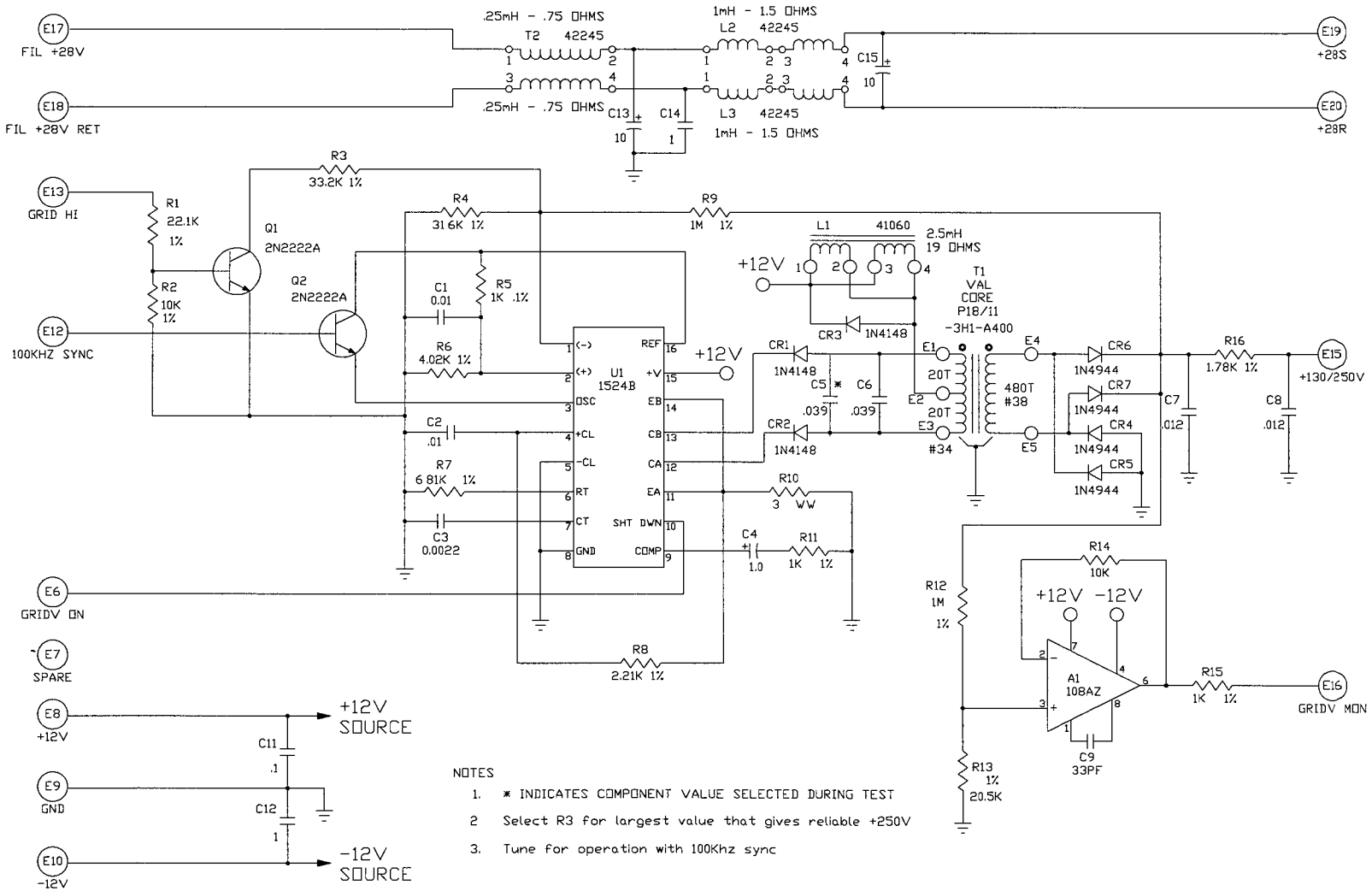

NOTES

1. * INDICATES COMPONENT VALUE SELECTED DURING TEST
2. Select R3 for largest value that gives reliable +250V
3. Tune for operation with 100Khz sync

XTRK-4/5 SCHEMATIC

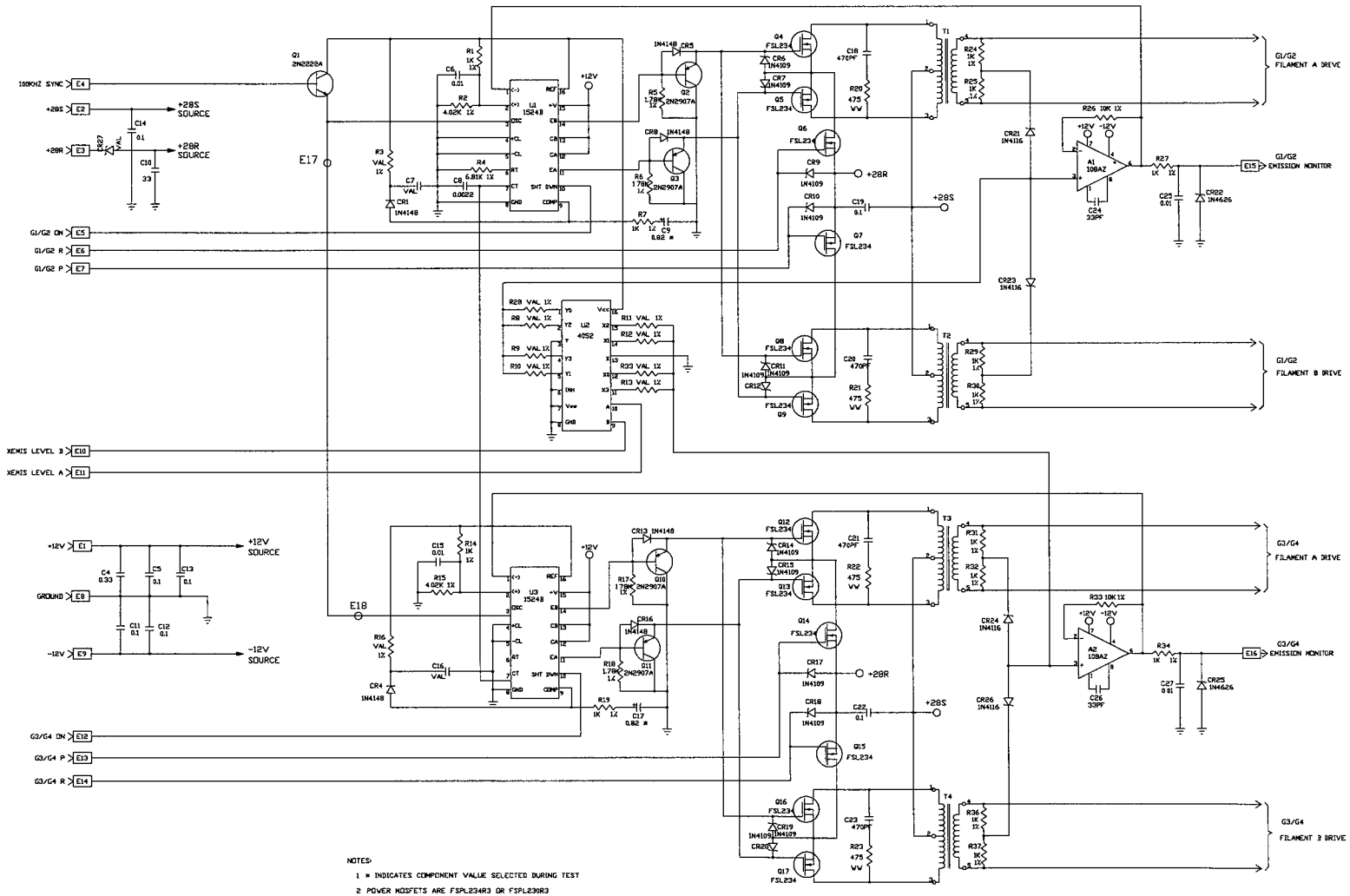

RWSBD1 SCHEMATIC

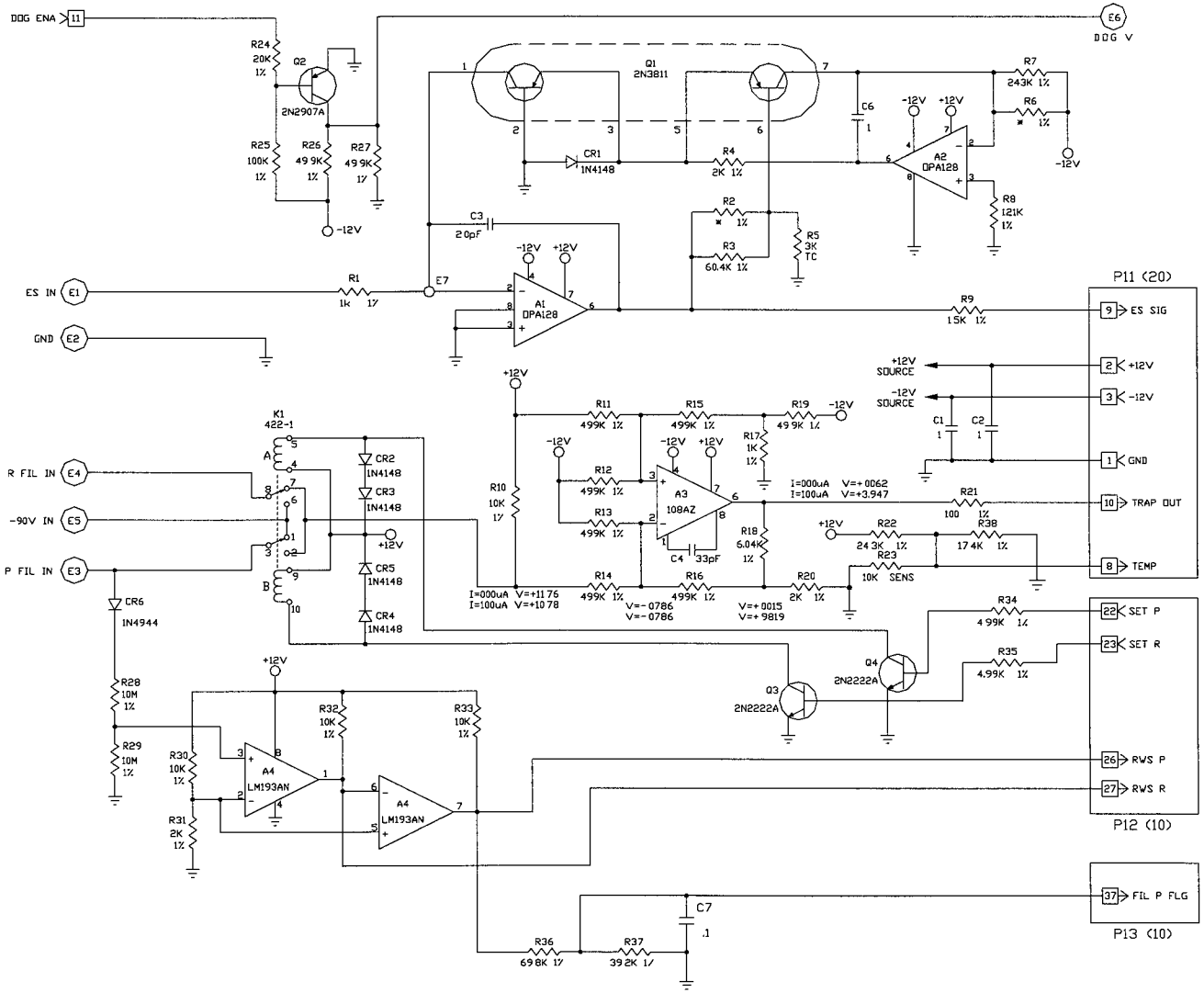

PS-90V SCHEMATIC 1

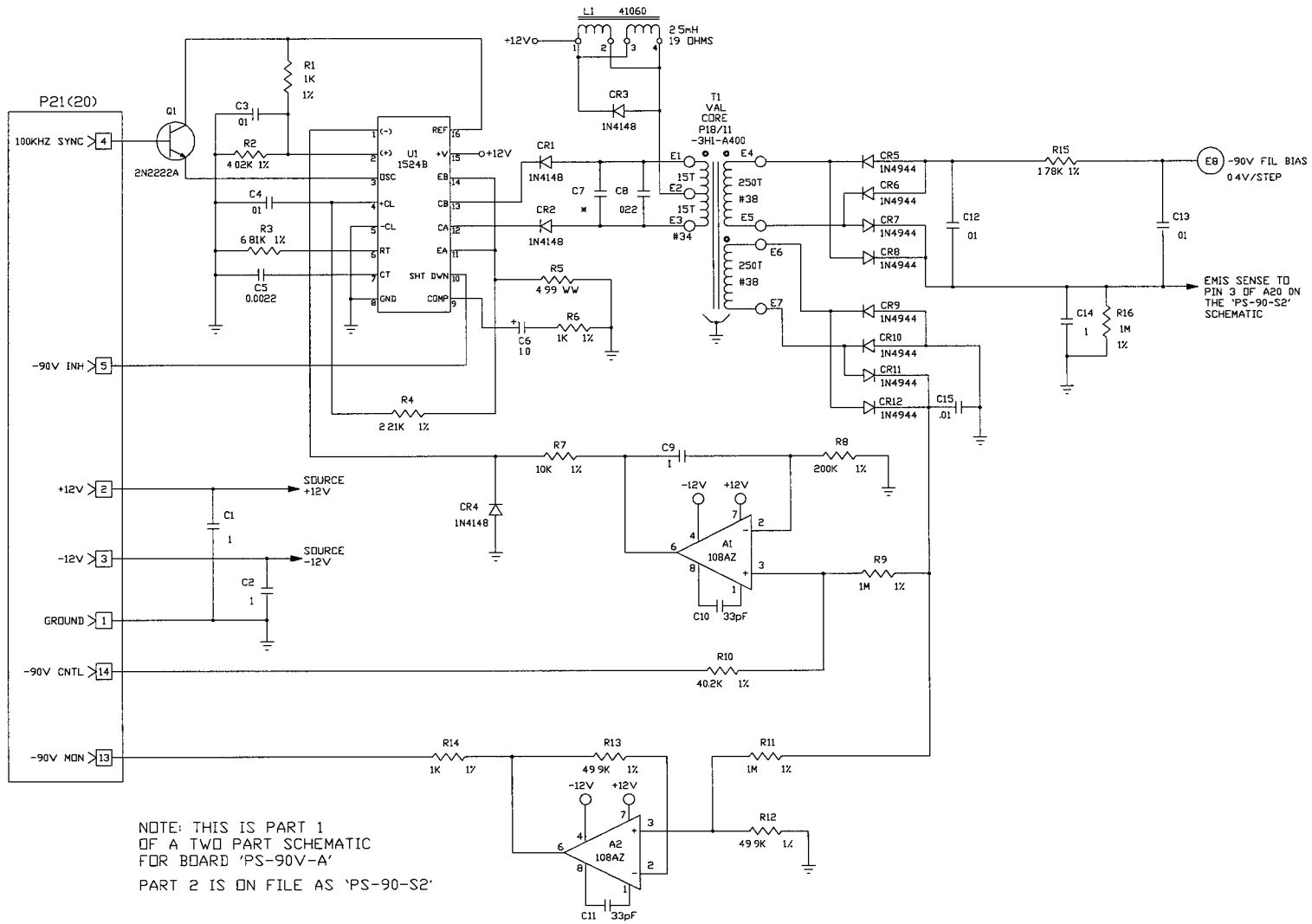

PS-90V SCHEMATIC 2

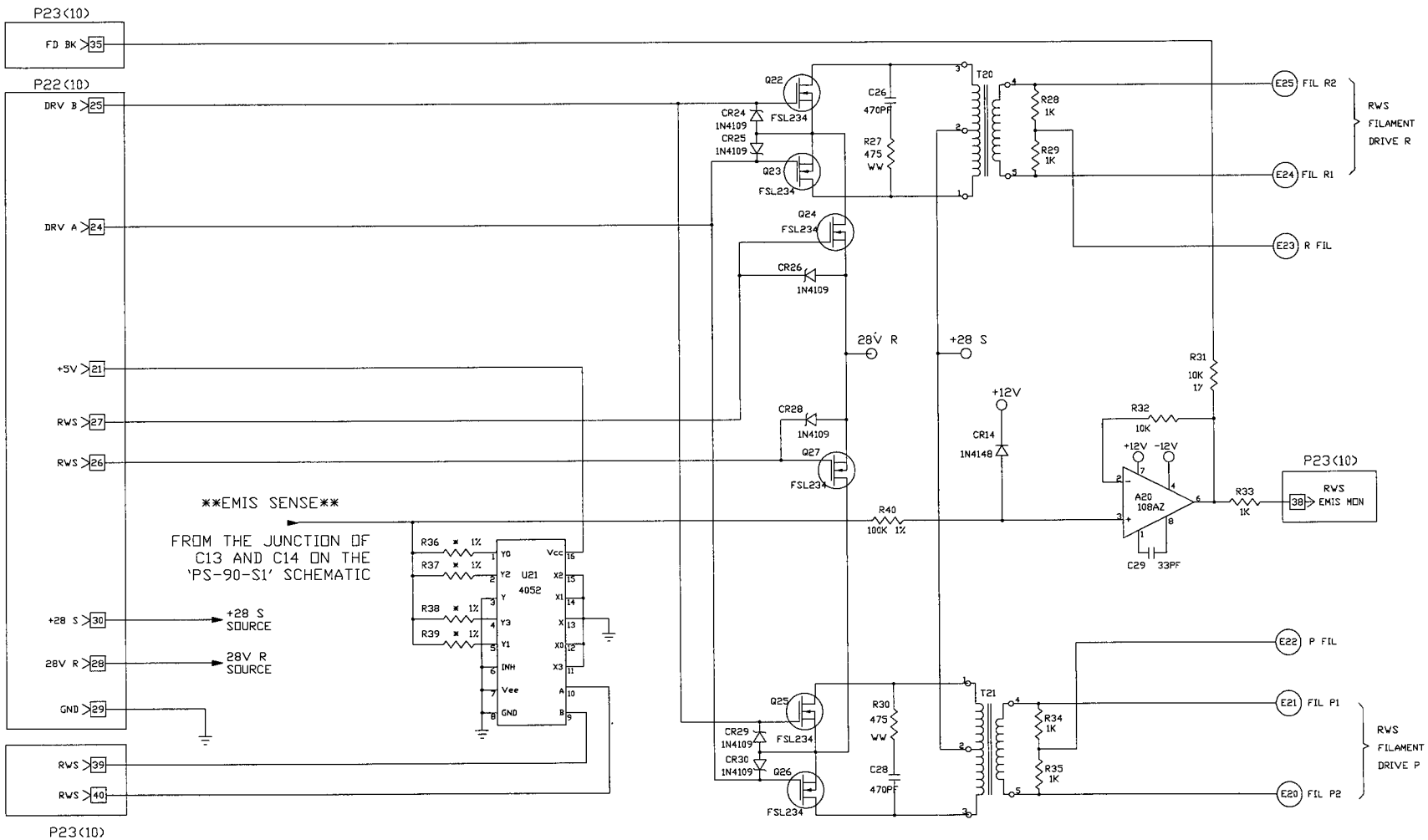

PS-100V SCHEMATIC 1

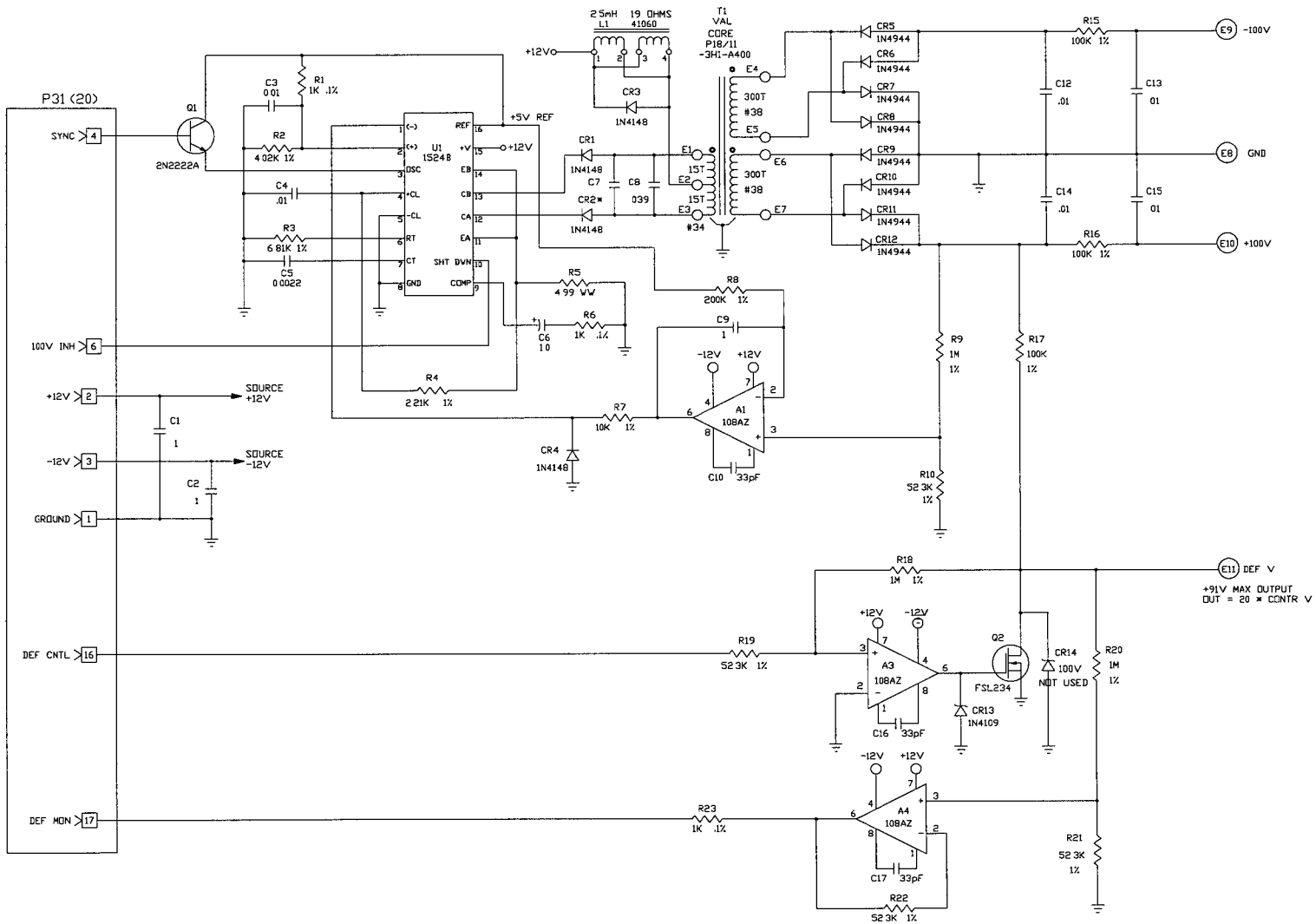

PS-100V SCHEMATIC 2

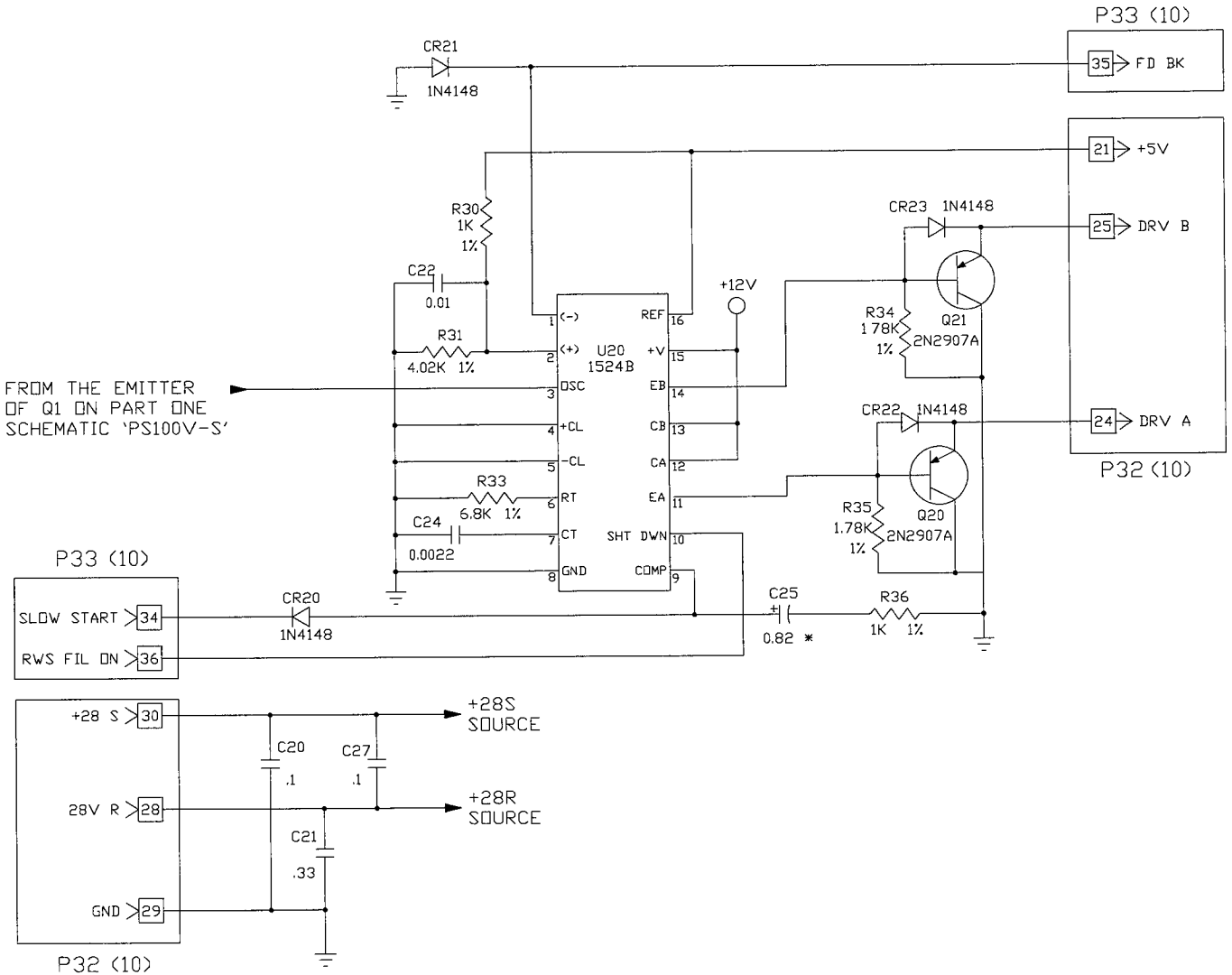

PS-MULT SCHEMATIC

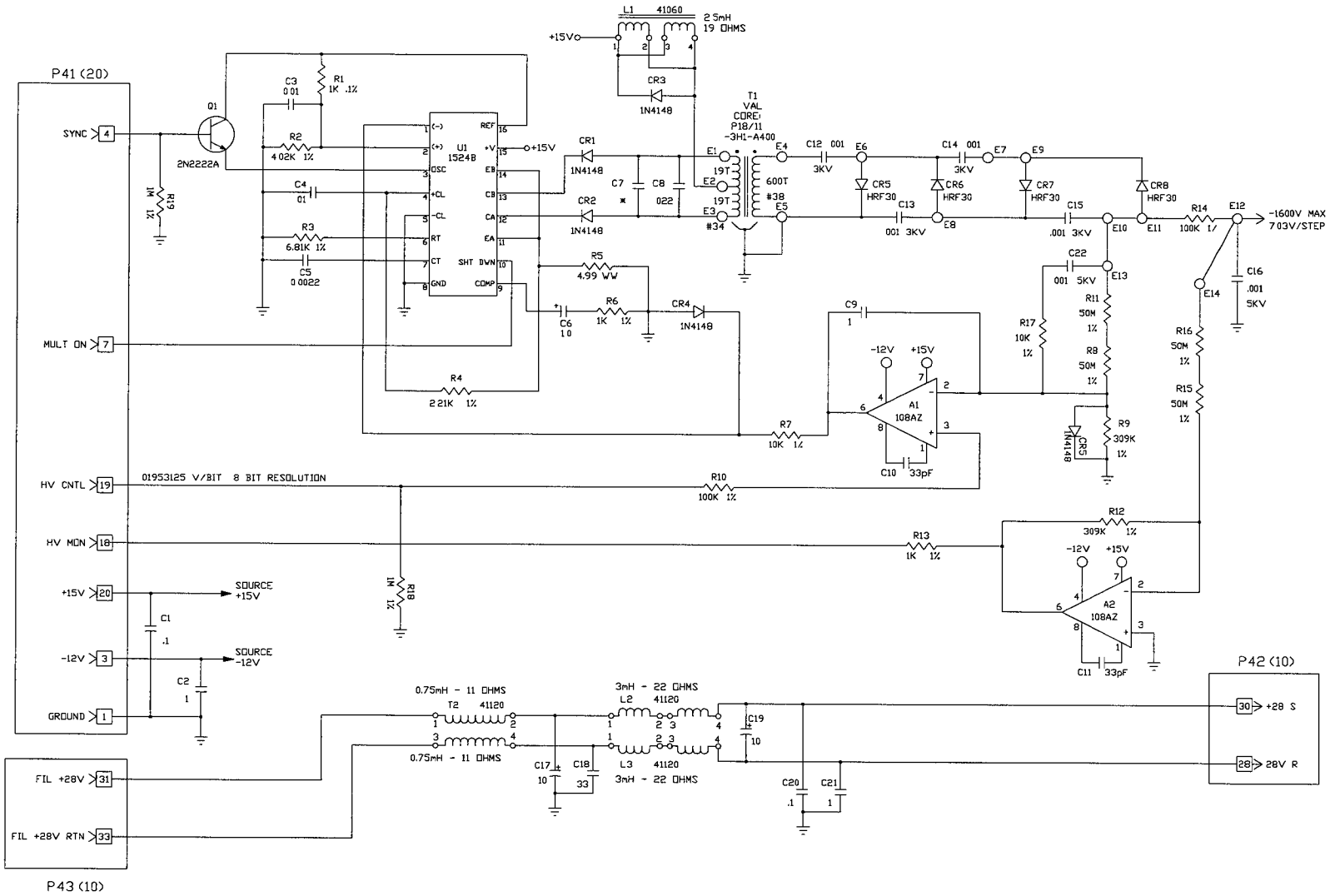

IVM-1 SCHEMATIC 1

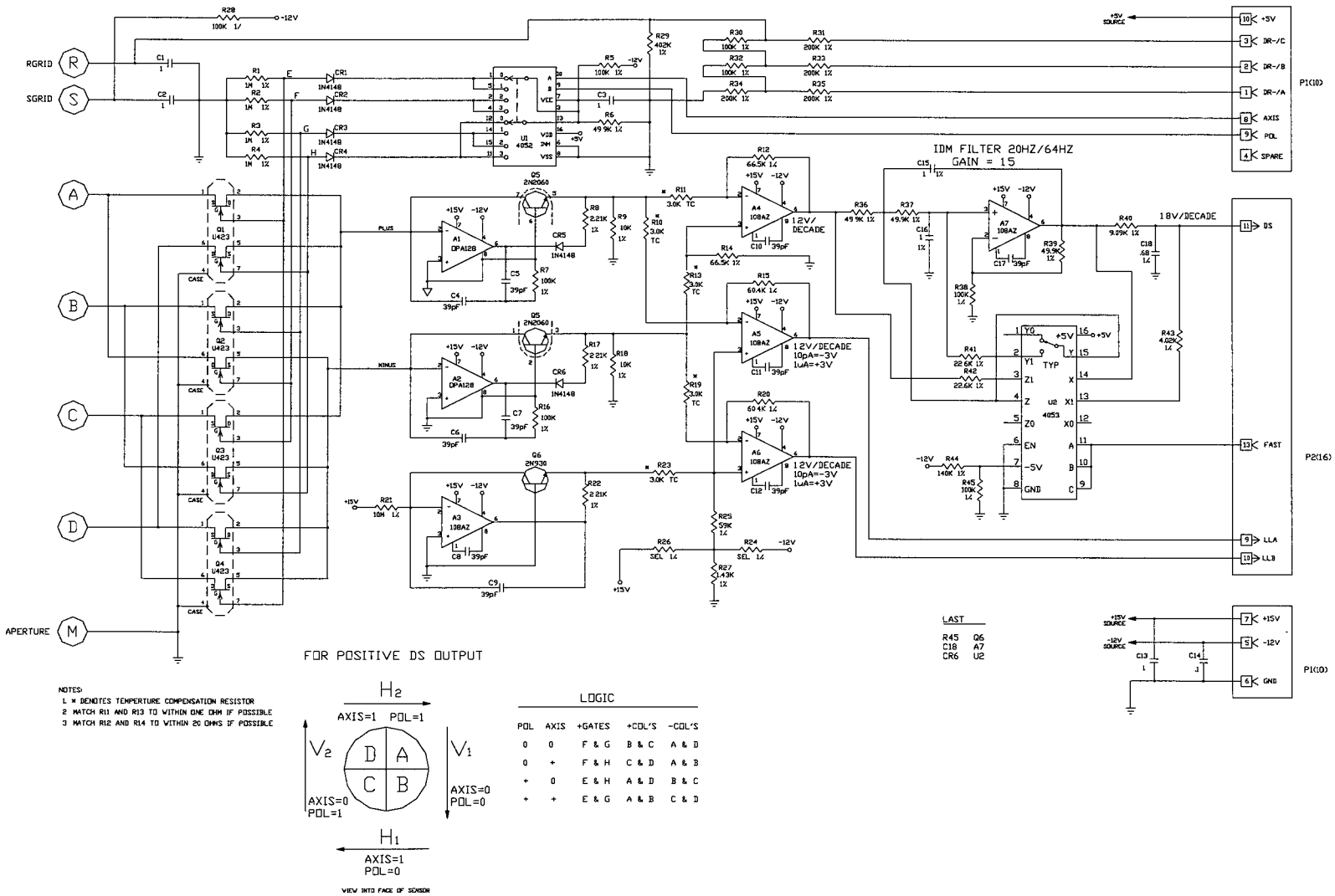

NOTES:
1. * DENOTES TEMPERTURE COMPENSATION RESISTOR
2. MATCH R11 AND R13 TO WITHIN ONE OHM IF POSSIBLE
3. MATCH R12 AND R14 TO WITHIN 20 OHMS IF POSSIBLE

LOGIC

POL	AXIS	+GATES	+COL'S	-COL'S
0	0	F & G	B & C	A & D
0	+	F & H	C & D	A & B
+	0	E & H	A & D	B & C
+	+	E & G	A & B	C & D

IVM-1 SCHEMATIC 2

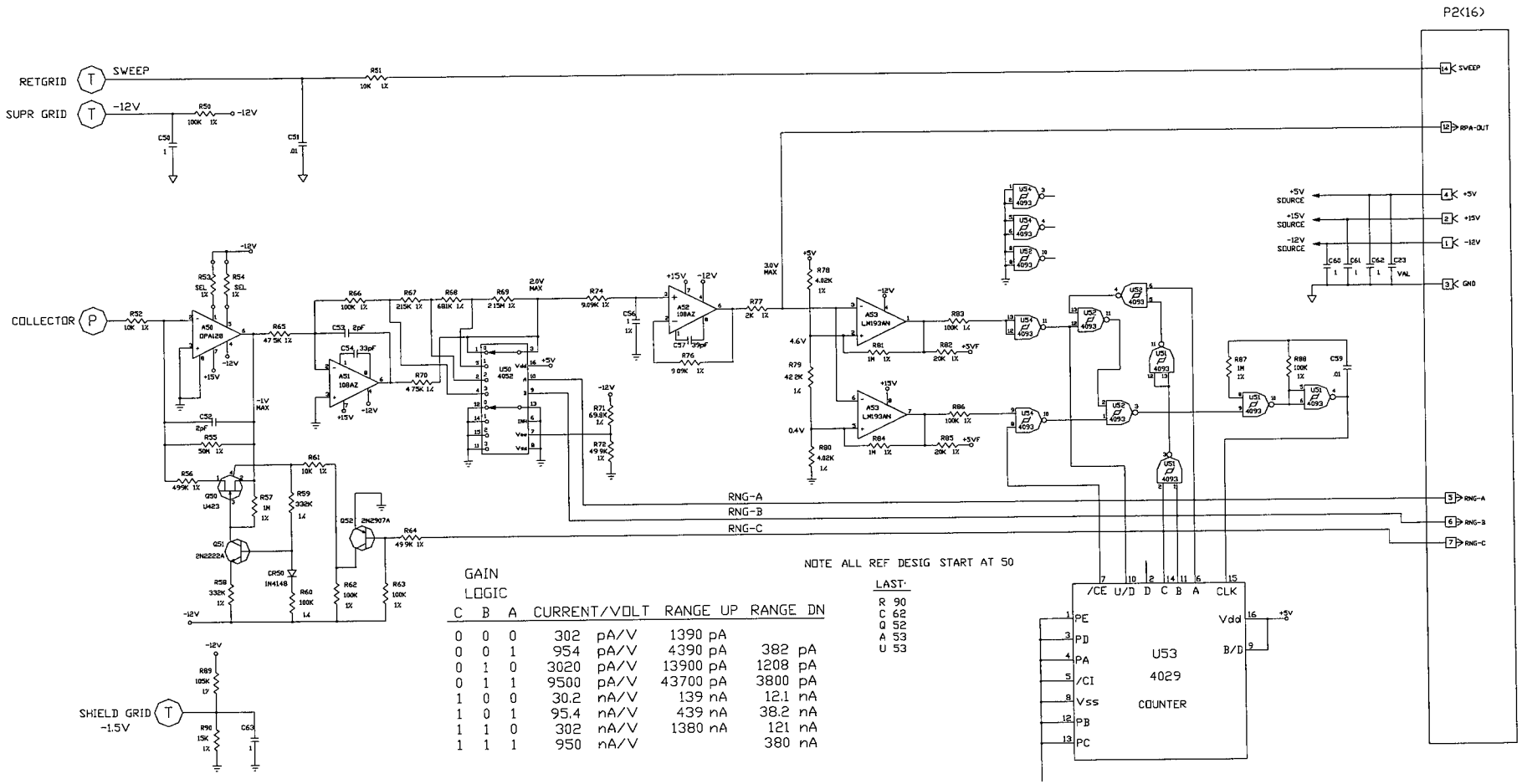

GAIN LOGIC

C	B	A	CURRENT/VOLT	RANGE UP	RANGE DN
0	0	0	302 pA/V	1390 pA	
0	0	1	954 pA/V	4390 pA	382 pA
0	1	0	3020 pA/V	13900 pA	1208 pA
0	1	1	9500 pA/V	43700 pA	3800 pA
1	0	0	30.2 nA/V	139 nA	12.1 nA
1	0	1	95.4 nA/V	439 nA	38.2 nA
1	1	0	302 nA/V	1380 nA	121 nA
1	1	1	950 nA/V		380 nA

NOTE ALL REF DESIG START AT 50

LAST:
R 90
C 62
Q 52
A 53
U 53

IVM-2 SCHEMATIC

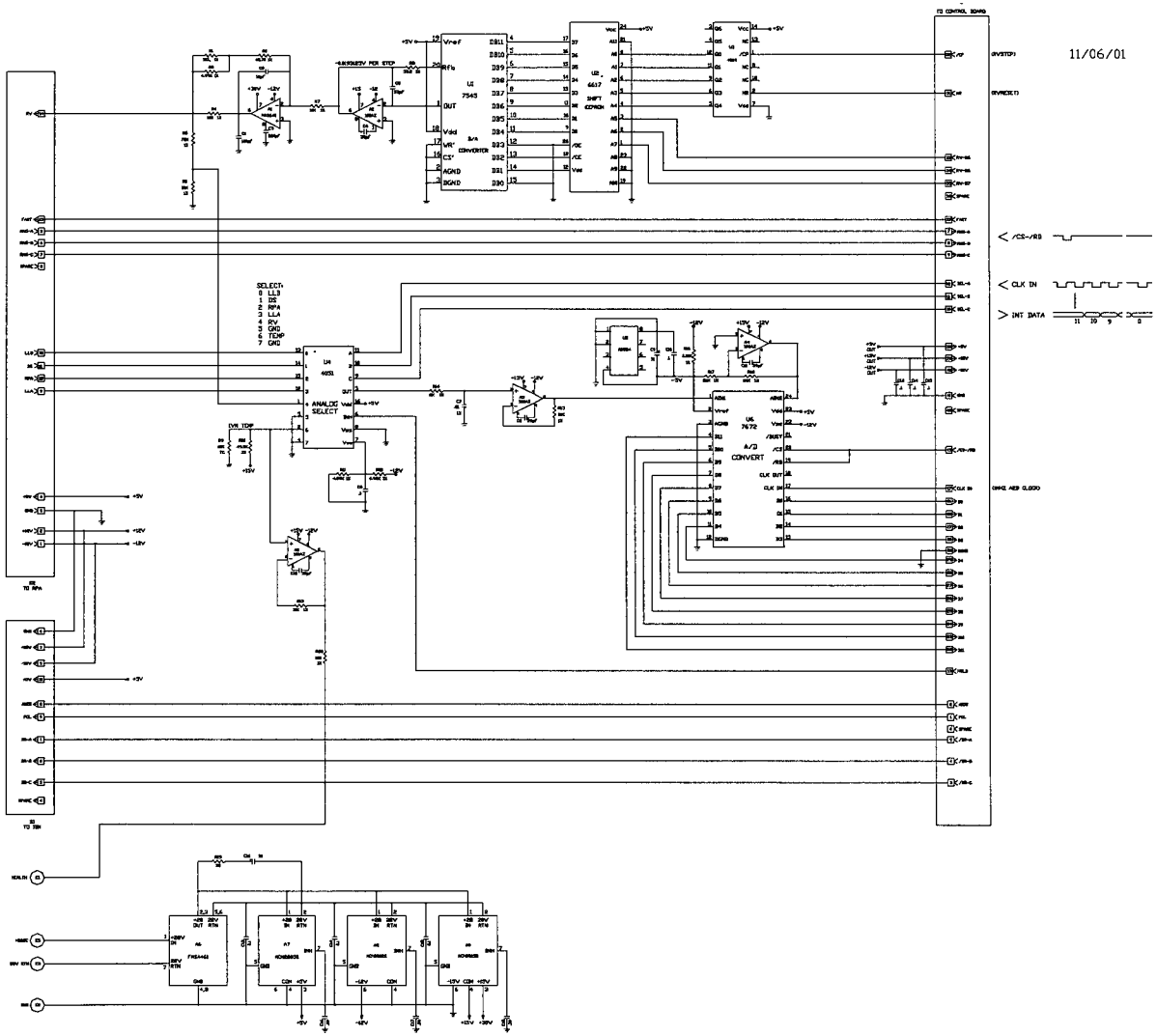

EBOX-1 SCHEMATIC

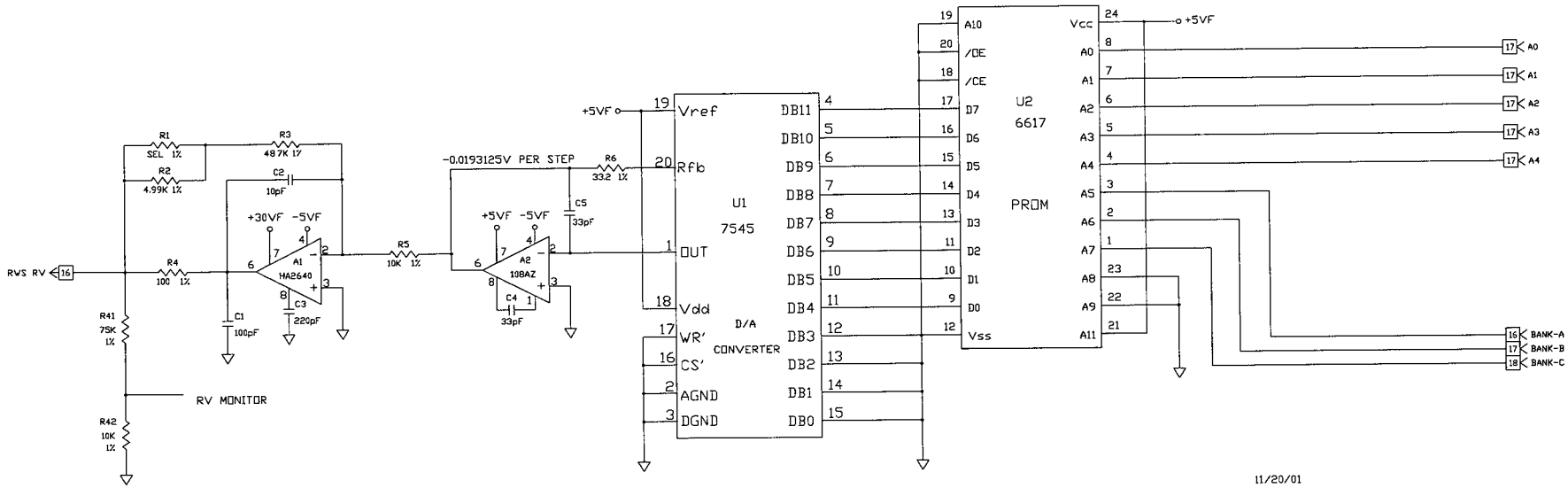

11/20/01

RWS RV GENERATOR

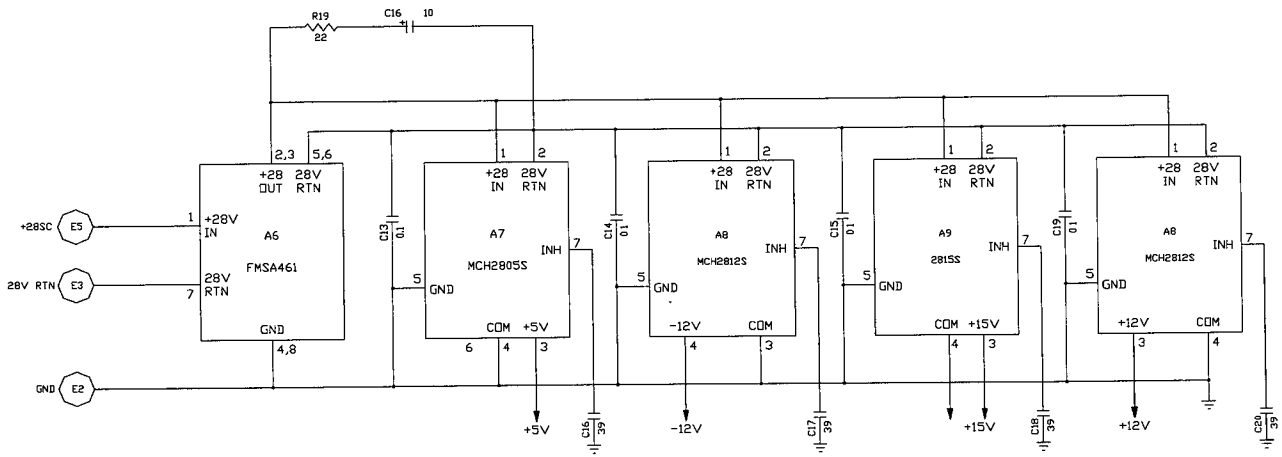

REF DES	DEVICE	PINS TO +5VF	PINS TO VAP	PINS TO -5VF	PINS TO +30VF
A1	HA2640		3	4	7
A2	108AZ	7	3	4	
A3	108AZ	7		4	

REF DES	DEVICE	PINS TO +5VF	PINS TO -5VF	PINS TO VAP
U1	MP7545	18,19		2,3,12,13,14,15
U2	27C32B	12,16	7	1,4,6,8
U3	4024	9,16		8,12

EBOX-2 SCHEMATIC 1

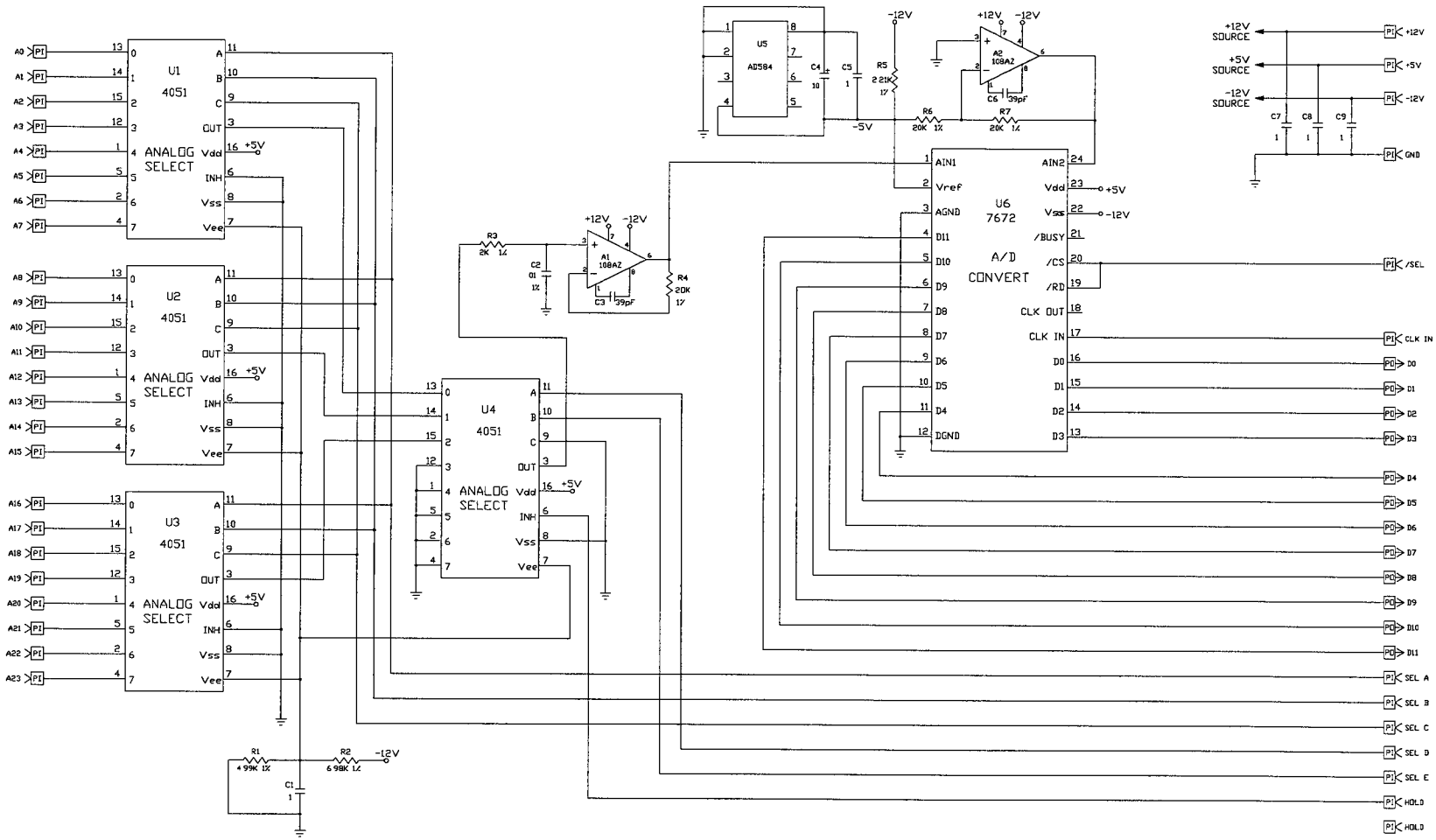

EBOX-2 SCHEMATIC 2

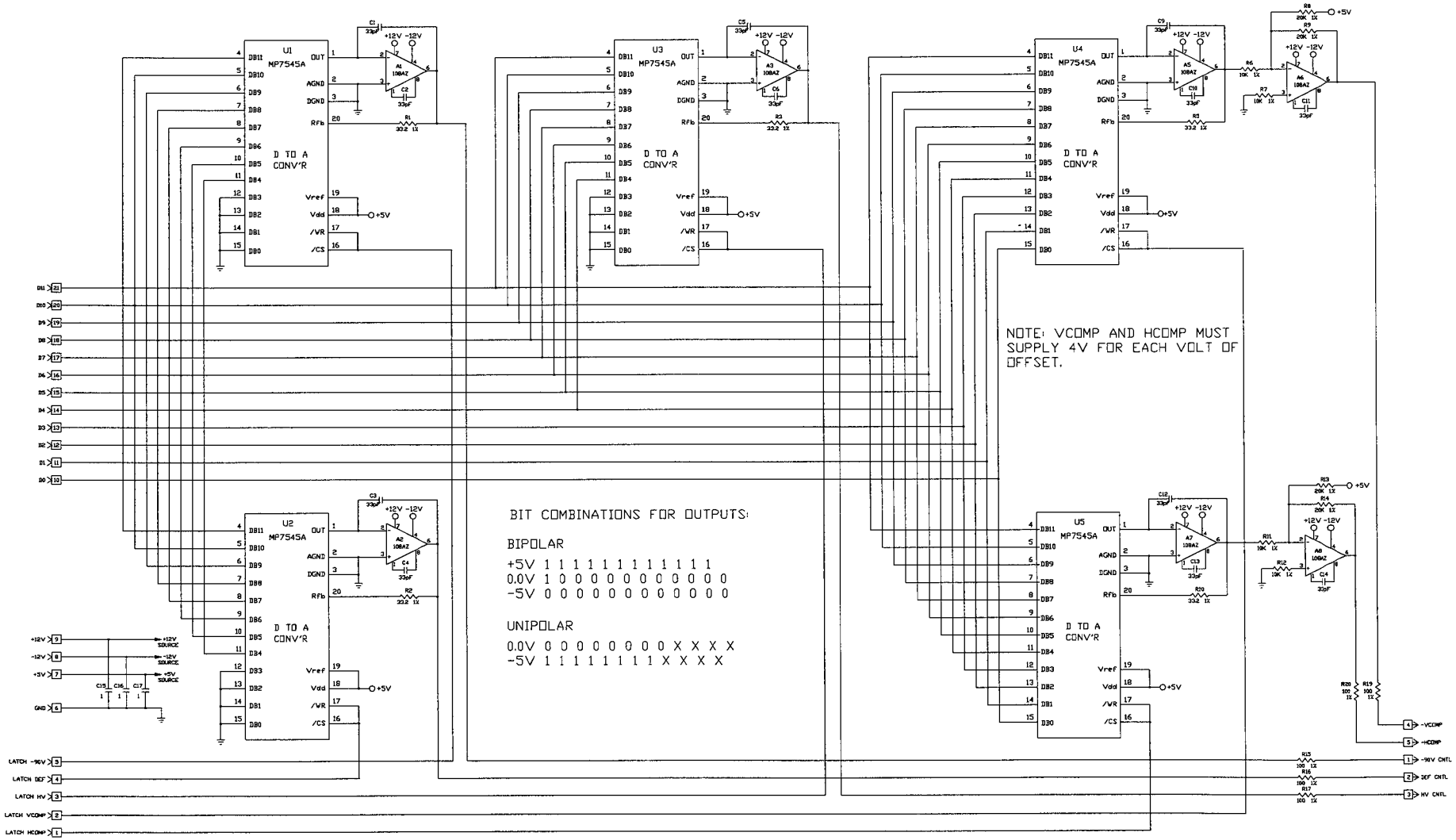

DIGITAL CIRCUITS

IVM and NWM Digital Controllers

Design Engineer: Keith Stelzenmuller

Controller Block Diagrams

Data Formats

FPGA Block Diagrams

Design Status

Controller Schematics

IVM - NWM DATA PACKET BUILDING

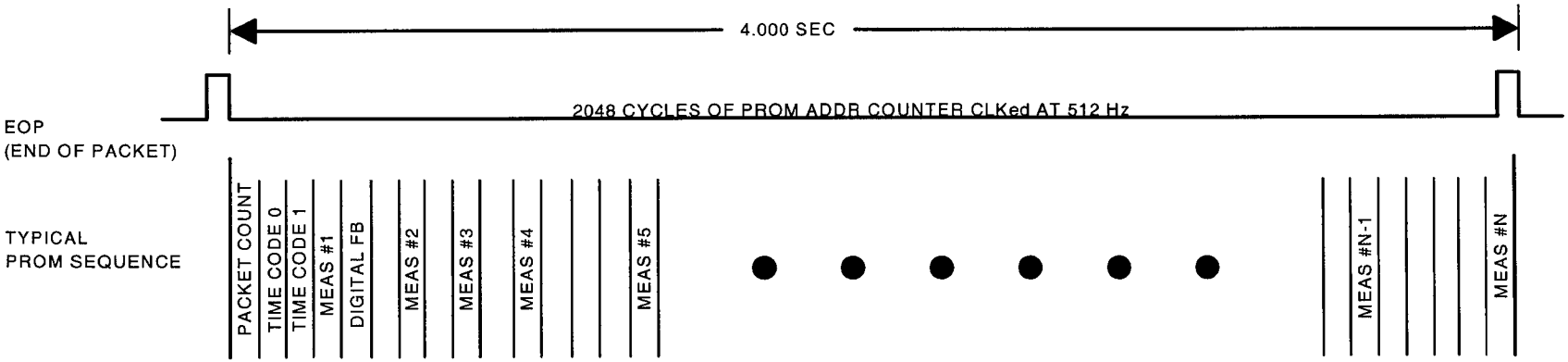

Total of all Measurements, Status and Command-FB is 768 Words in 4 Sec.

Sequence and Spacing of Measurements Determined by PROM

Each Data Type has a Unique 4 (IVM) or 6 (NWM) Bit Code

Only Analog Measurements Need Careful Spacing and Ordering to Allow Voltages to Settle After Multiplexor Switching and Before A/D Conversion

IVM and NWM PROM DATA FORMATS

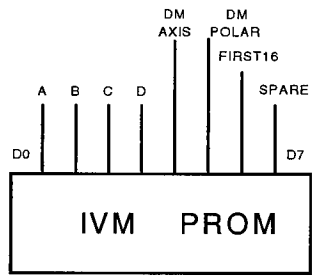

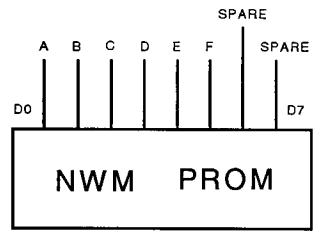

D=0=ANALOG D=1=DIGITAL

D=0

C B A	DATA NAME
0 0 0	LLB
0 0 1	DRIFTMETER (DM)
0 1 0	RPA
0 1 1	LLA
1 0 0	RVMON
1 0 1	— GND
1 1 0	TEMP
1 1 1	— GND

D=1

0 0 0	PACKET COUNTER
0 0 1	TIMECODE LO
0 1 0	TIMECODE HI
0 1 1	COMMAND STATUS
1 0 0	—
1 0 1	—
1 1 0	—
1 1 1	NULL ENTRY

NOTES DM AXIS AND POLARITY STAY CONSTANT THROUGH OTHER ENTRIES UNTIL AFTER NEXT DRIFTMETER (DM) SAMPLE

FIRST16 DENOTES DMMODE EXCLUSION REGION

F=0=ANALOG F=1=DIGITAL

F=0

E D C B A	DATA NAME
0 0 0 0 0	H
0 0 0 0 1	V
0 0 0 1 0	P1
0 0 0 1 1	P2
0 0 1 0 0	P3
0 0 1 0 1	P4
0 0 1 1 0	RAM
0 0 1 1 1	RWSTEMP
0 1 0 0 0	XTRKTEMP
0 1 0 0 1	EBOXTEMP
0 1 0 1 0	G1 EMISSMON
0 1 0 1 1	G2 EMISSMON
0 1 1 0 0	G3 EMISSMON
0 1 1 0 1	G4 EMISSMON
0 1 1 1 0	RWS EMISSMON
0 1 1 1 1	RWSFILBIASMON
1 0 0 0 0	GRIDVMON
1 0 0 0 1	HVMON
1 0 0 1 0	DEFVMON
1 0 0 1 1	RWSRVMON

F=1

E D C B A	DATA NAME
0 0 0 0 0	PACKET COUNT
0 0 0 0 1	TIMECODE LO
0 0 0 1 0	TIMECODE HI
0 1 0 0 1	COMSTAT 1
0 1 0 1 0	COMSTAT 2
0 1 0 1 1	COMSTAT 3
0 1 1 0 0	COMSTAT 4
0 1 1 0 1	COMSTAT 5
1 1 1 1 1	NULL ENTRY

IVM Digital Controller Block Diagram

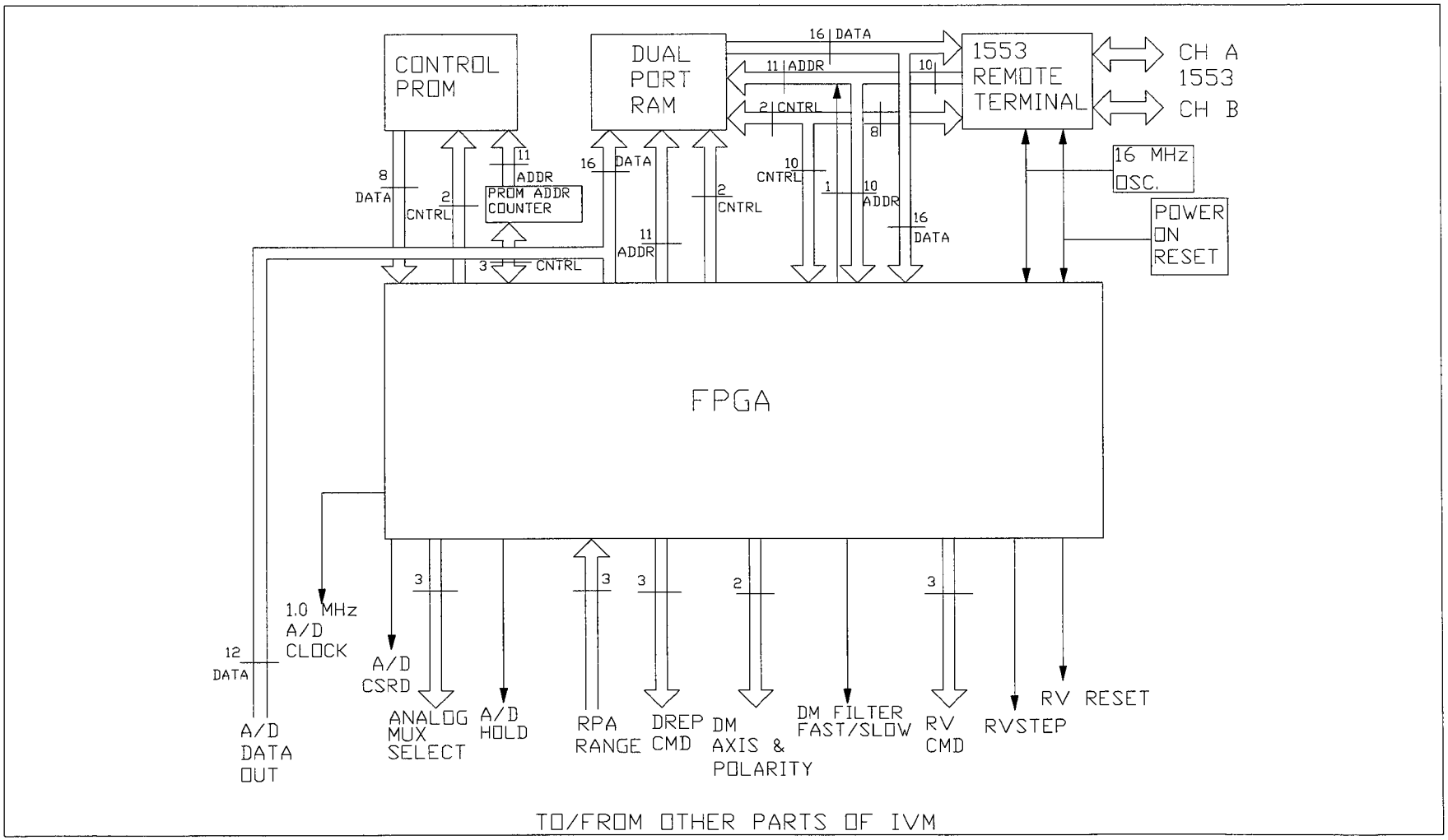

IVM DATA SUMMARY

IVM Data Table					
	Signal Name	Samp/Sec	Samp/Pack	PROMspacing	Data Type & Components
	DM	128	512	4	12 bits A/D, Axis/Pol,Tsync
	RPA	32	128	16	12 bits A/D.Range,Tsync
	LLA	8	32	64	12 bits A/D, Axis/Pol,Tsync
	LLB	8	32	64	12 bits A/D, Axis/Pol,Tsync
	MUX	16	64	32	see IVM Muxed data detail
Total			768		
IVM Muxed Data detail					
	PACKCNT		1	2048	Packet Count 15 Bits, Tsync
	TIMECODE0		1	2048	Lowest 15 Bits SC Time, Tsync
	TIMECODE1		1	2048	Next 15 bits SC Time, Tsync
	COMSTAT		1	2048	2 Bits DM Mode,3Bits RV Blk, 3Bits DREP, Tsync
	TEMP		1	2048	12 bits A/D, Axis/Pol,Tsync
	RVMON	about 16	56	about 32	12 bits A/D, Axis/Pol,Tsync
	Spare		3		
Total			64		

IVM 1553 Interface

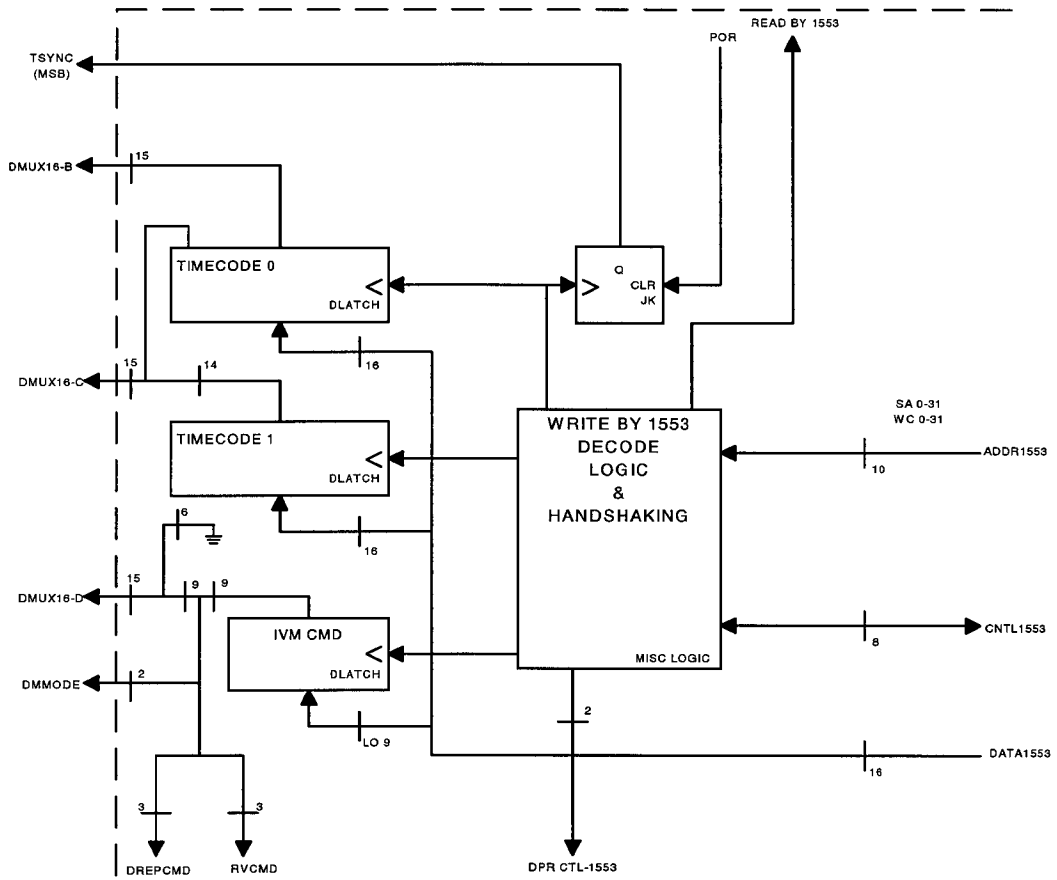

IVM DIGITAL CMD PROCESSING

IVM Data Word Formation/Muxing

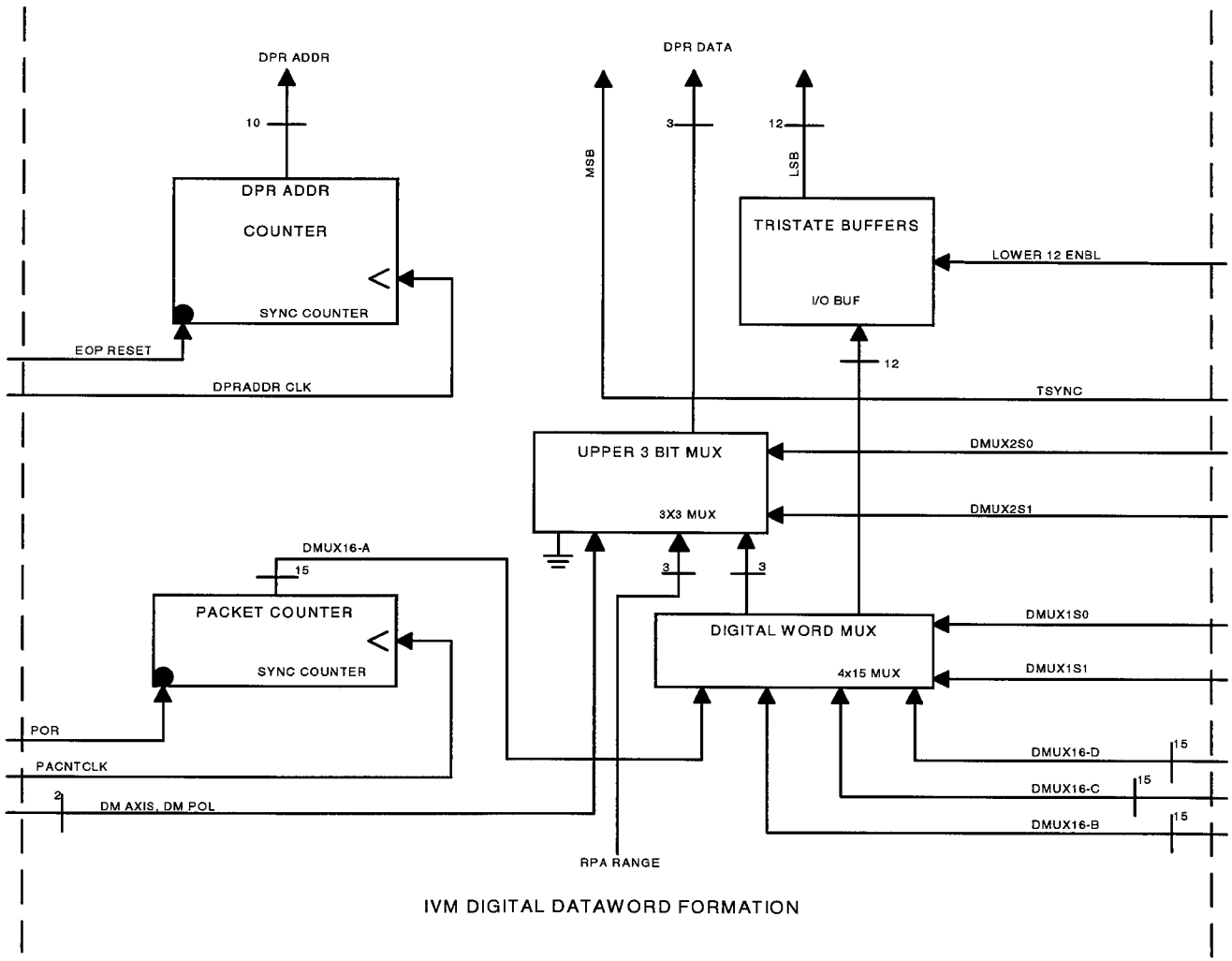

IVM DIGITAL DATAWORD FORMATION

IVM Control Logic

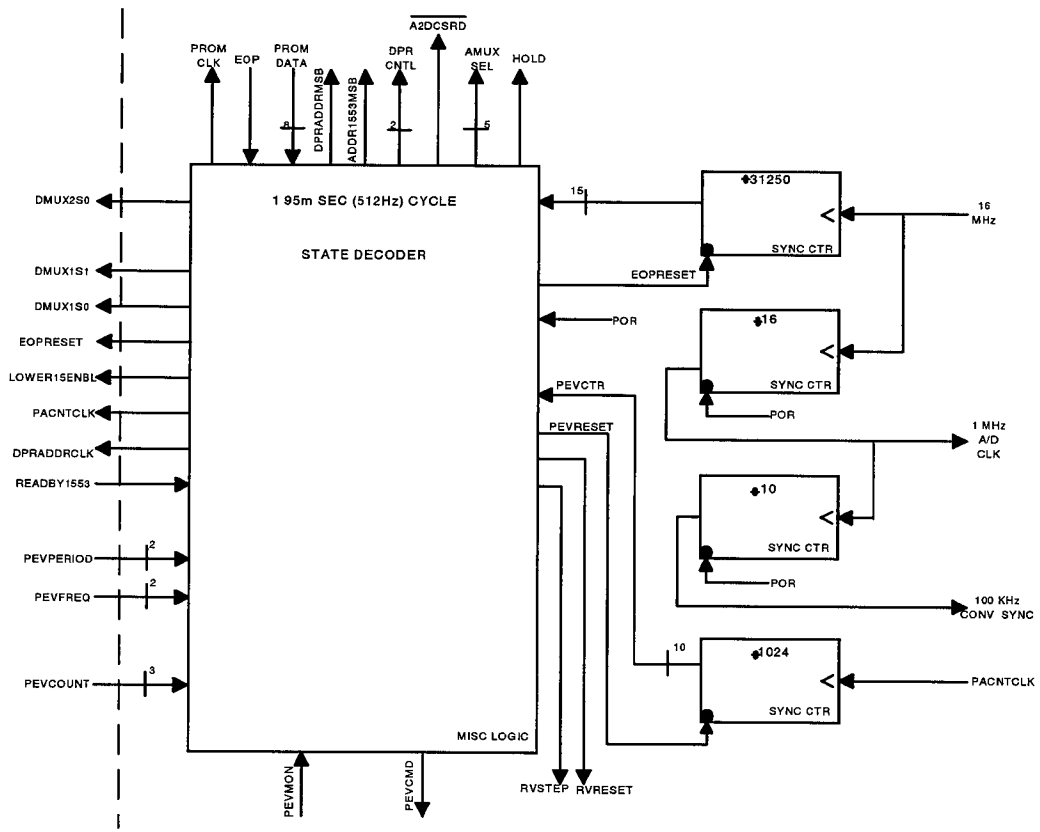

NWM 2 FPGA DIGITAL CONTROL LOGIC

IVM Drift Meter Mode Logic Block - Expanded

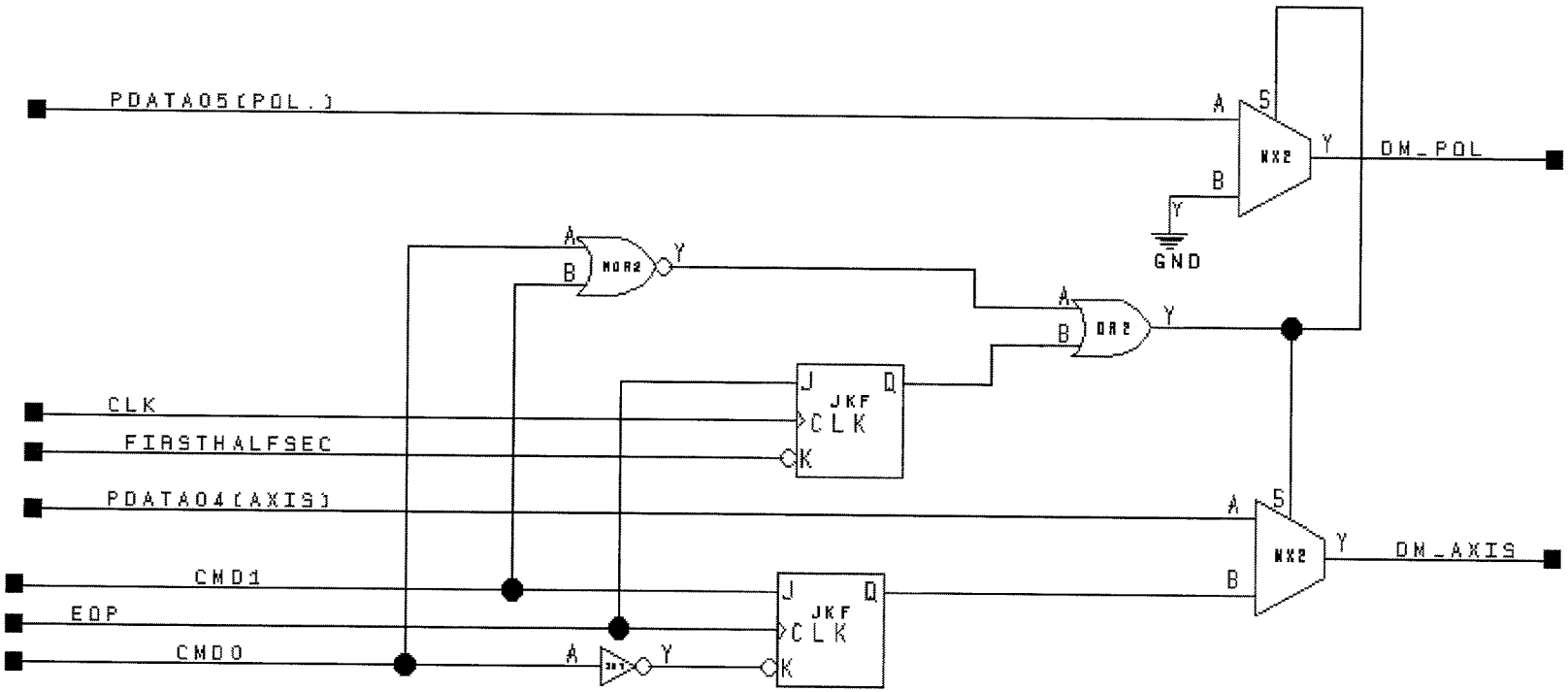

NWM Digital Controller Block Diagram

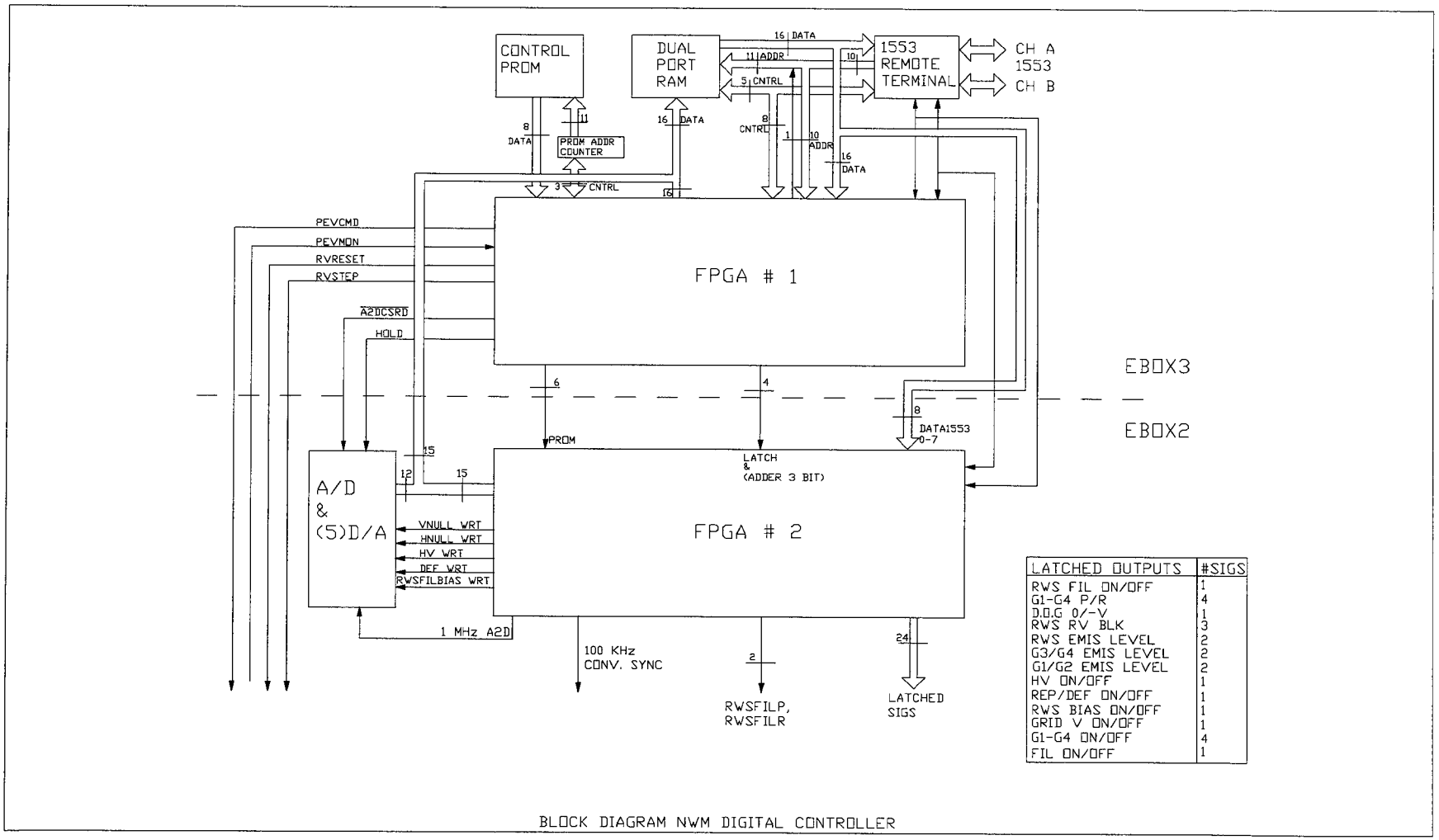

LATCHED OUTPUTS	#SIGS
RWS FIL ON/OFF	1
G1-G4 P/R	4
D.O.G 0/-V	1
RWS RV BLK	3
RWS EMIS LEVEL	2
G3/G4 EMIS LEVEL	2
G1/G2 EMIS LEVEL	2
HV ON/OFF	1
REP/DEF ON/OFF	1
RWS BIAS ON/OFF	1
GRID V ON/OFF	1
G1-G4 ON/OFF	4
FIL ON/OFF	1

NWM DATA SUMMARY – SCIENCE DATA

NWM Data Table					
	Signal Name	Samp/Sec	Samp/Pack	PROMspacing	Data Type & Components
	H	16	64	8	12 bits A/D.PEVMON,Tsync
	V	16	64	8	12 bits A/D.PEVMON,Tsync
	P1	4	16	32	12 bits A/D.PEVMON,Tsync
	P2	4	16	32	12 bits A/D.PEVMON,Tsync
	P3	4	16	32	12 bits A/D.PEVMON,Tsync
	P4	4	16	32	12 bits A/D.PEVMON,Tsync
	RAM	32	128	4	12 bits A/D.PEVMON,Tsync
	MUXed DATA	16	64	8	see NVM Muxed data detail
Total		96	384		

NWM DATA SUMMARY – MUXed DATA

NVM Muxed data detail				
Signal Name	Samp/Sec	Samp/Pack	PROMspacing	Data Type & Components
PACKCNT		1	2048	Packet Count 15 Bits, Tsync
TIMECODE0		1	2048	Lowest 15 Bits SC Time, Tsync
TIMECODE1		1	2048	Next 15 bits SC Time, Tsync
COMSTAT1		1	2048	11 to 15 Bits CMDs see CMDSTST detail
COMSTAT2		1	2048	11 to 15 Bits CMDs see CMDSTST detail
COMSTAT3		1	2048	11 to 15 Bits CMDs see CMDSTST detail
COMSTAT4		1	2048	11 to 15 Bits CMDs see CMDSTST detail
COMSTAT5		1	2048	11 to 15 Bits CMDs see CMDSTST detail
RWS TEMP		1	2048	12 bits A/D.PEVMON,Tsync
XTRK TEMP		1	2048	12 bits A/D.PEVMON,Tsync
EBOX TEMP		1	2048	12 bits A/D.PEVMON,Tsync
GRID V MON		1	2048	12 bits A/D.PEVMON,Tsync
HV MON		1	2048	12 bits A/D.PEVMON,Tsync
G1 EMISSMON		2	1024	12 bits A/D.PEVMON,Tsync
G2 EMISSMON		2	1024	12 bits A/D.PEVMON,Tsync
G3 EMISSMON		2	1024	12 bits A/D.PEVMON,Tsync
G4 EMISSMON		2	1024	12 bits A/D.PEVMON,Tsync
RWS EMISSM	1	4	512	12 bits A/D.PEVMON,Tsync
RWS FILBIASM	1	4	512	12 bits A/D.PEVMON,Tsync
DEF V MON	1	4	512	12 bits A/D.PEVMON,Tsync
RWS RV MON	about 8	31	about 64	12 bits A/D.PEVMON,Tsync

NWM 1553 Interface

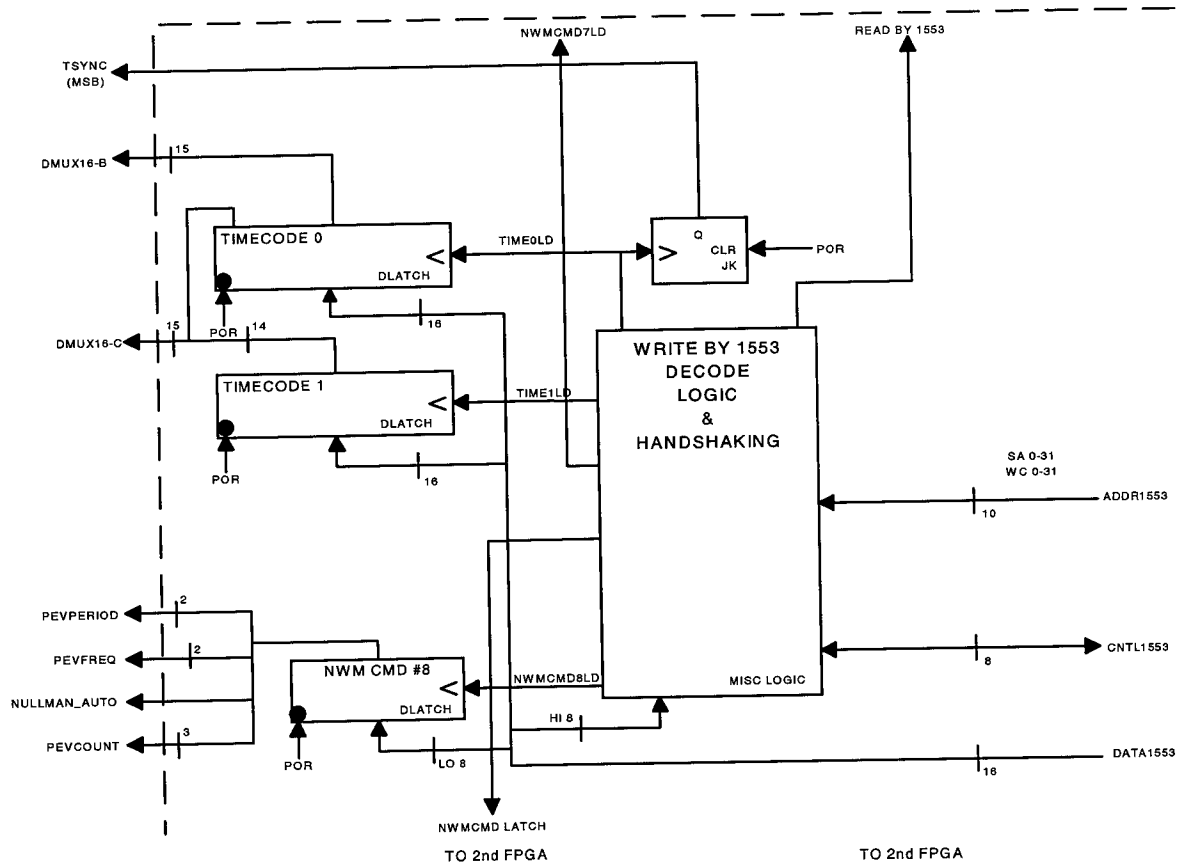

NWM 2 FPGA DIGITAL CMD PROCESSING

NWM Data Word Formation

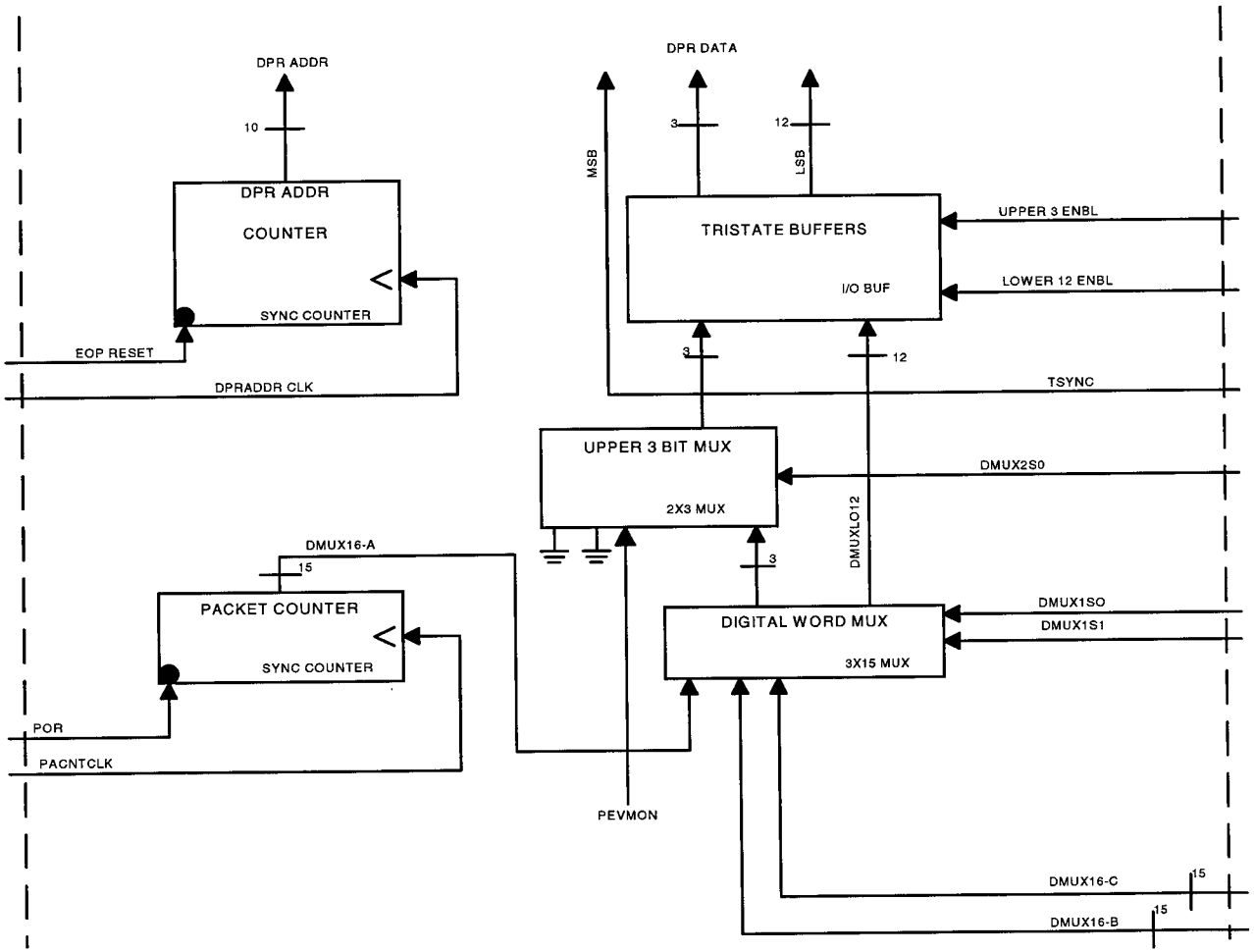

NWM DIGITAL 2 FPGA DATAWORD FORMATION

NWM Control Logic

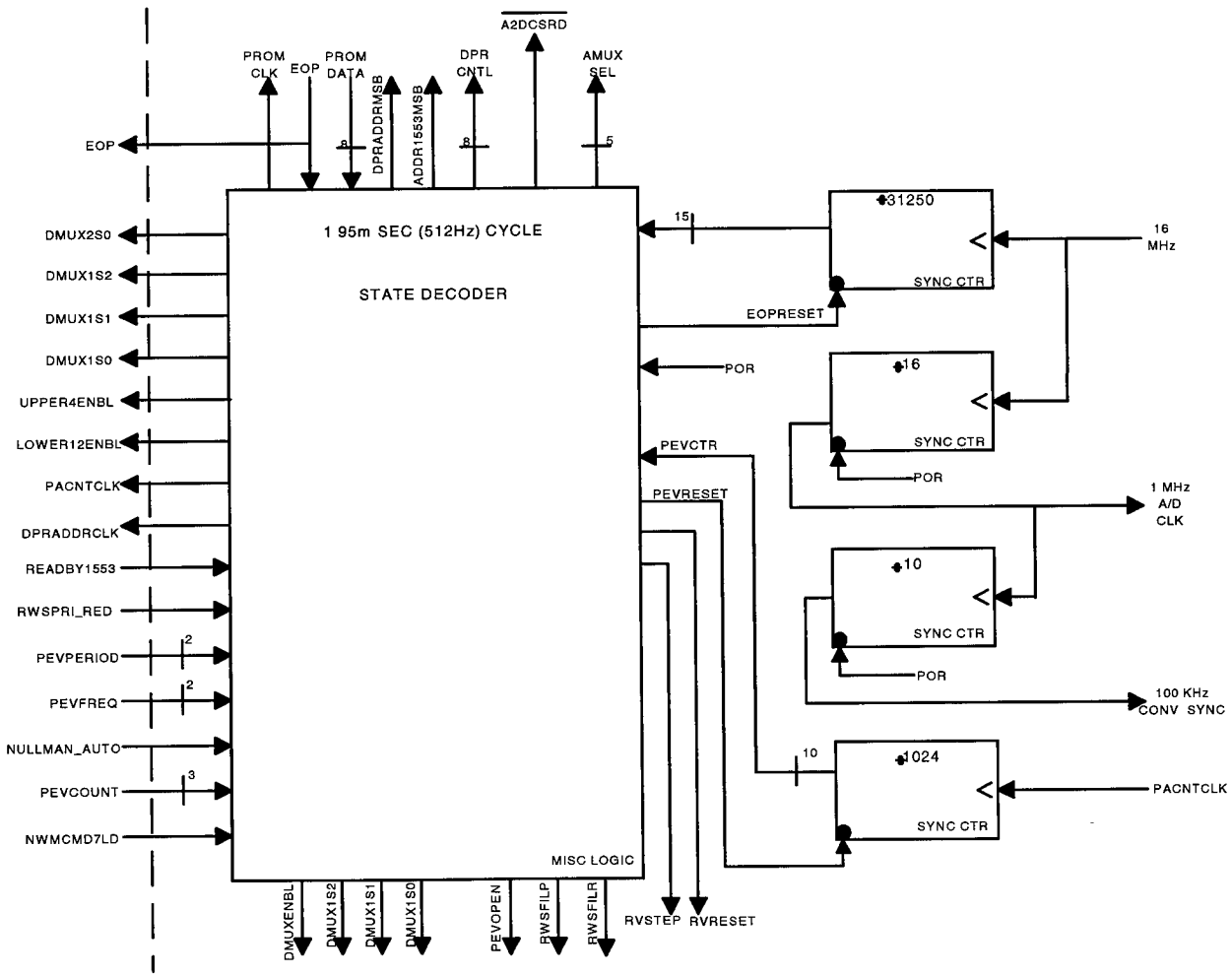

NWM 2 FPGA DIGITAL CONTROL LOGIC

NWM FPGA#2 Block Diagram

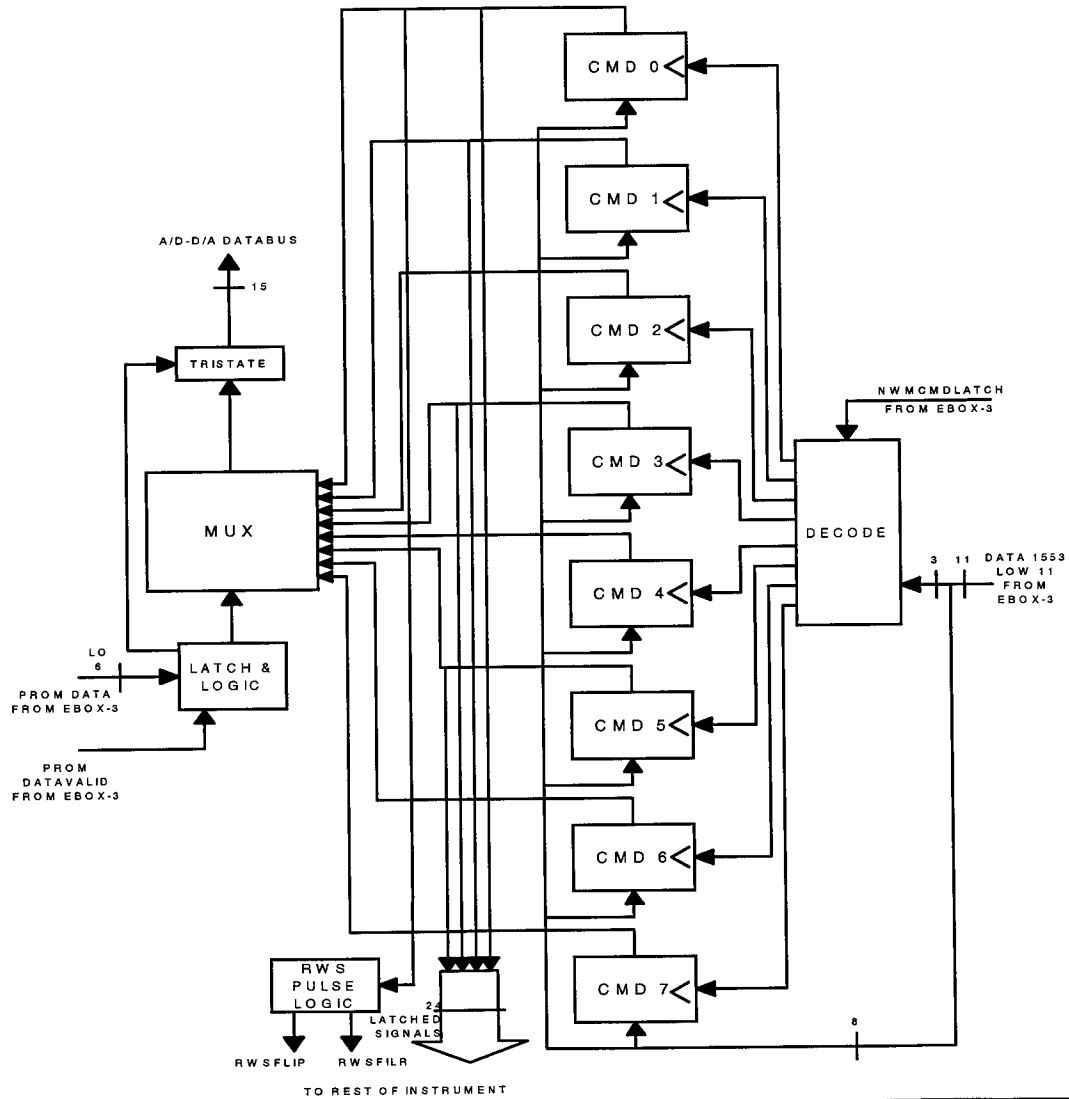

NVM A/D and D/A PATHWAYS

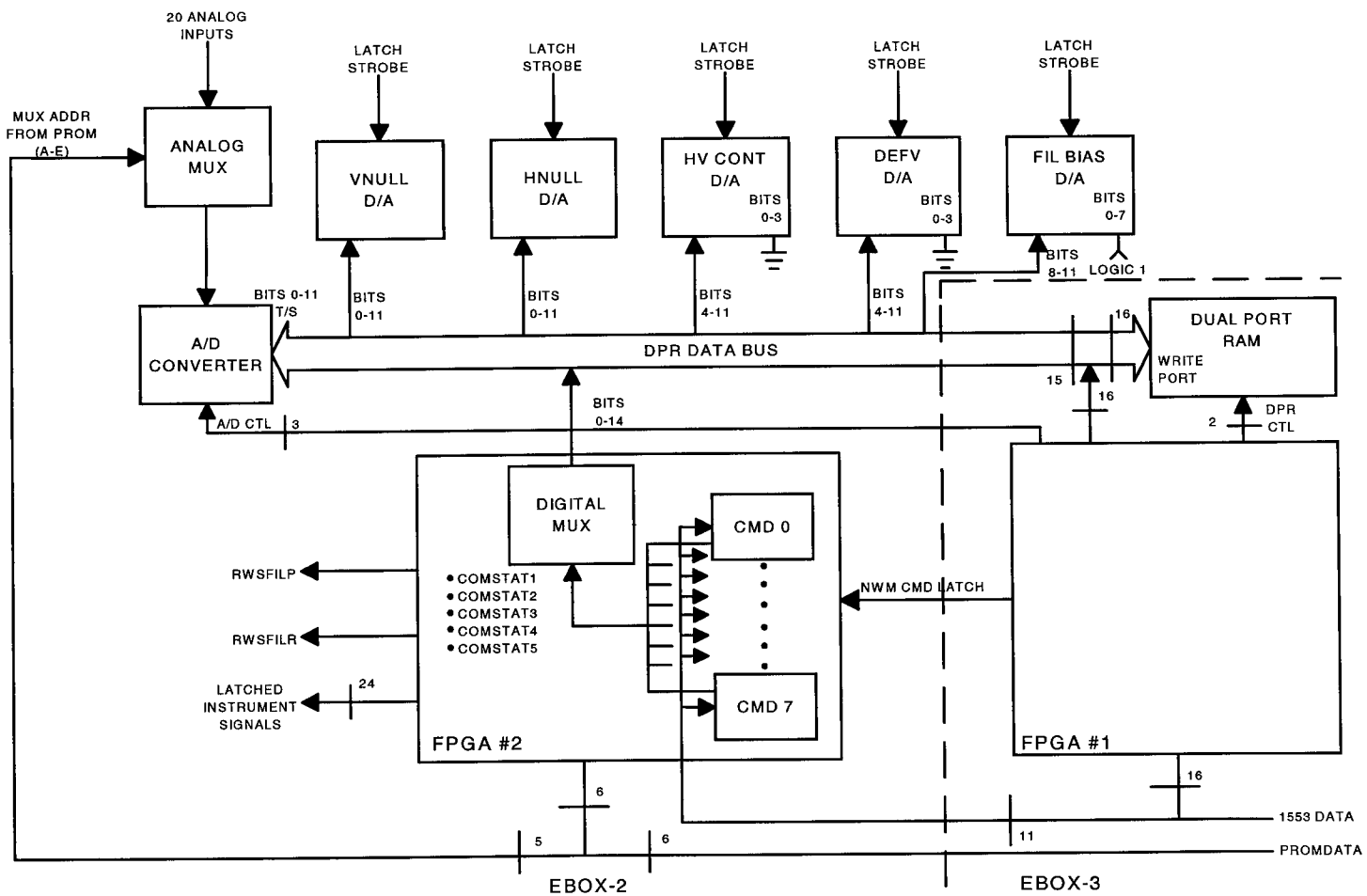

IVM Progress and Status

First Pass IVM FPGA Layout Complete, timing in checkout

Layout Statistics:

Module	Used	Out of	%
Seq.	39	624	6.3
Logic	484	1232	39.3
I/O	114	140	81.4
Clock	1	2	50

Peer Review Held, Changes in Incorporation

Initial PROM program Prepared

Engrg Board layout complete, on track for IVU system

End / Start Measurement Cycle – Sim.

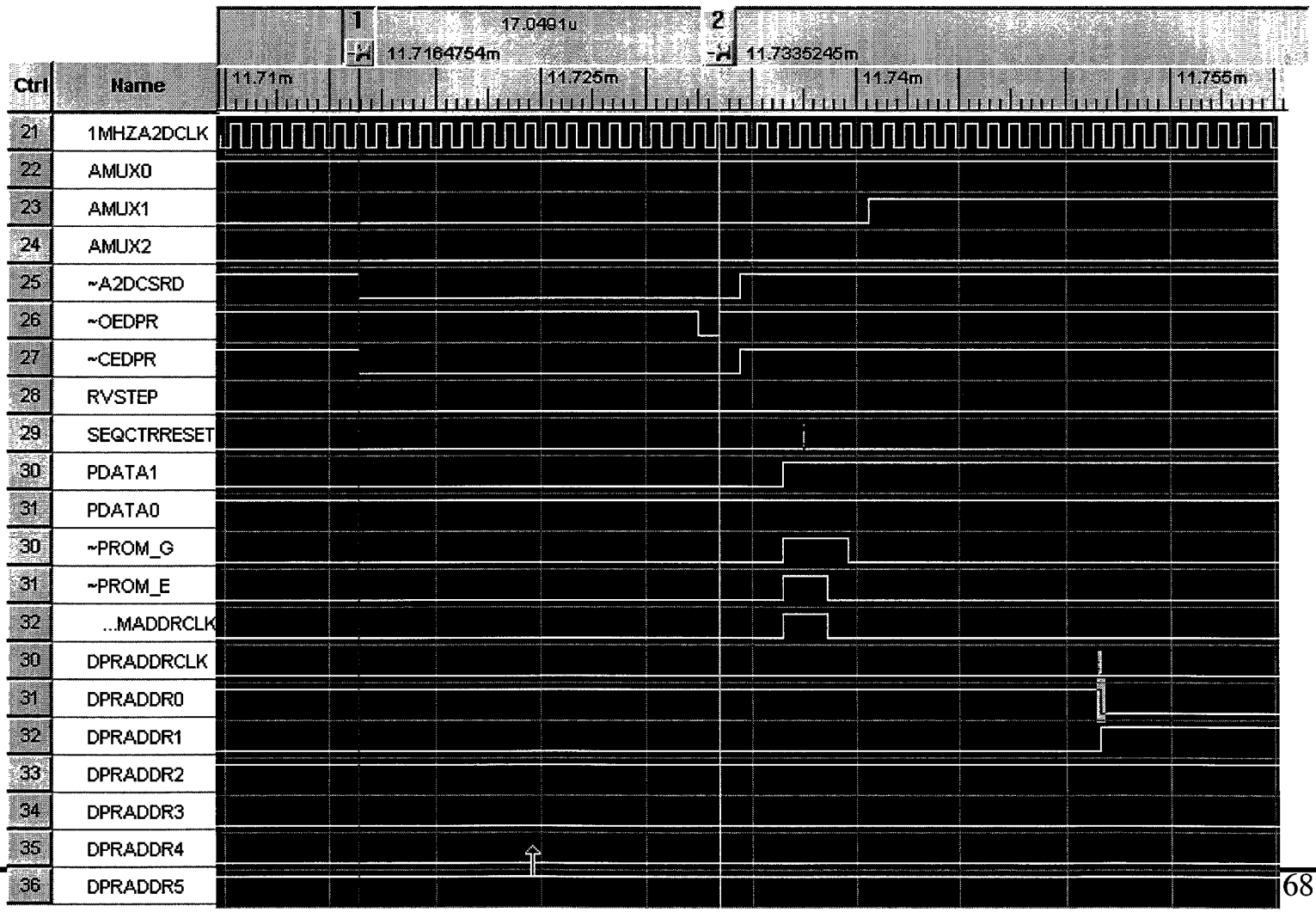

1553 Write – TIMECODE – Sim.

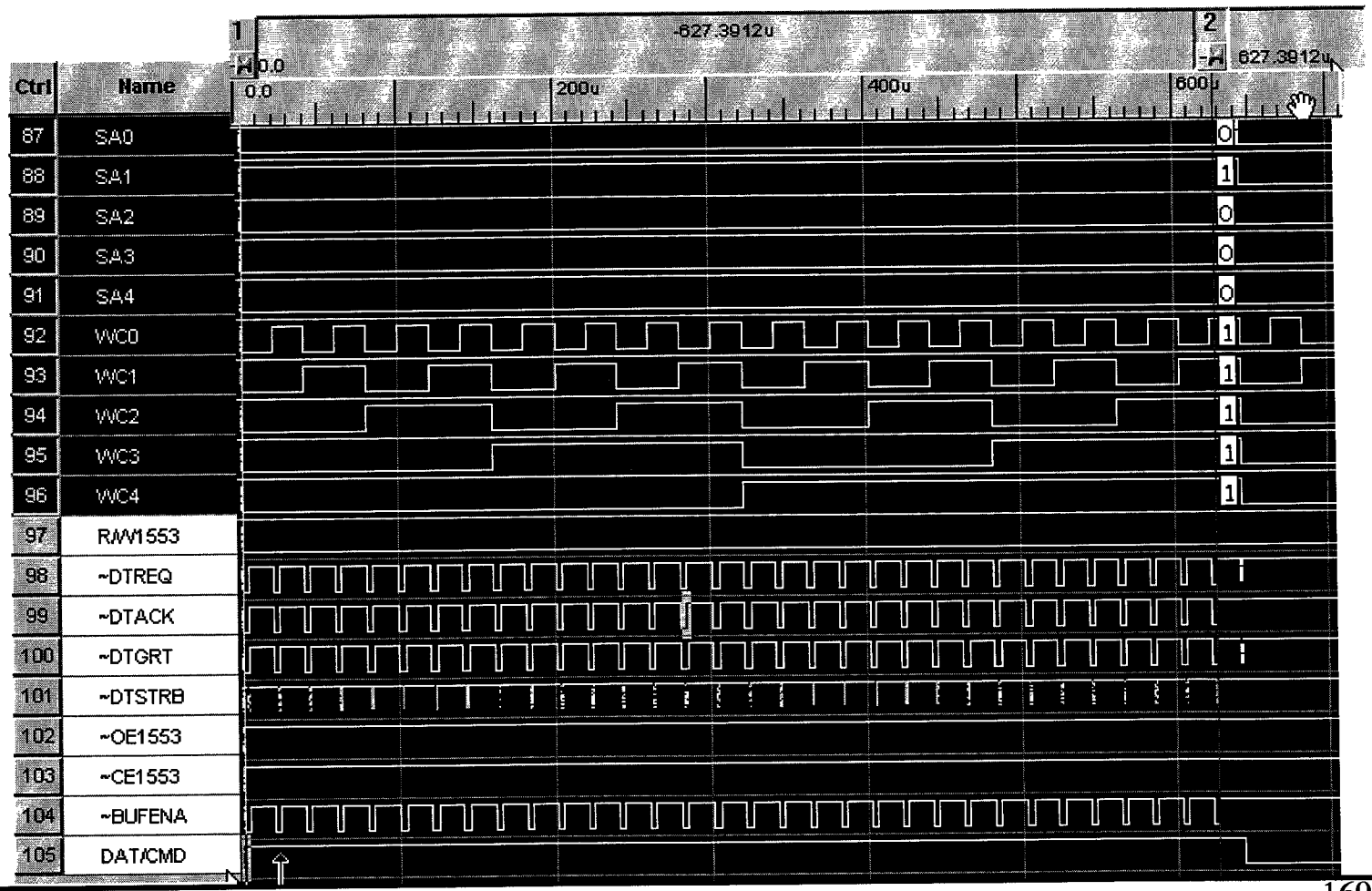

IVM Controller Peer Review Actions

1) Evaluate Power/Gnd Plane Usage

2) Put in synchronization on two derived clocks

3) Complete Back Annotation Timing Checks

IVM Digital Controller : Major Tasks Ahead

Complete Timing Analyses

Prepare Test Procedures

Test PWB Functionally; Prepare IVU

Integrate Digital Controllers with Rest of Instrument

At Each Step, Prepare Documentation

IVM/IVU Digital Controller Test Sequence

Verify Power, Clock and Reset Distribution,

Verify PROM counter and FPGA timing for each data type

Verify Total PROM sequence

Verify 1553 Command Transfer

Verify 1553 Data Packet Transmission

Verify IVM Mode Changes

NWM Progress and Status

NWM Controller Re-partition Complete

Board Schematic Virtually Complete

FPGAs reuse about 50% of Logic from IVM
50% of the rest is similar,

80% Ext. Device – FPGA Timing will be verified by IVM

IVM and NWM Digital Controllers 1553 I/F

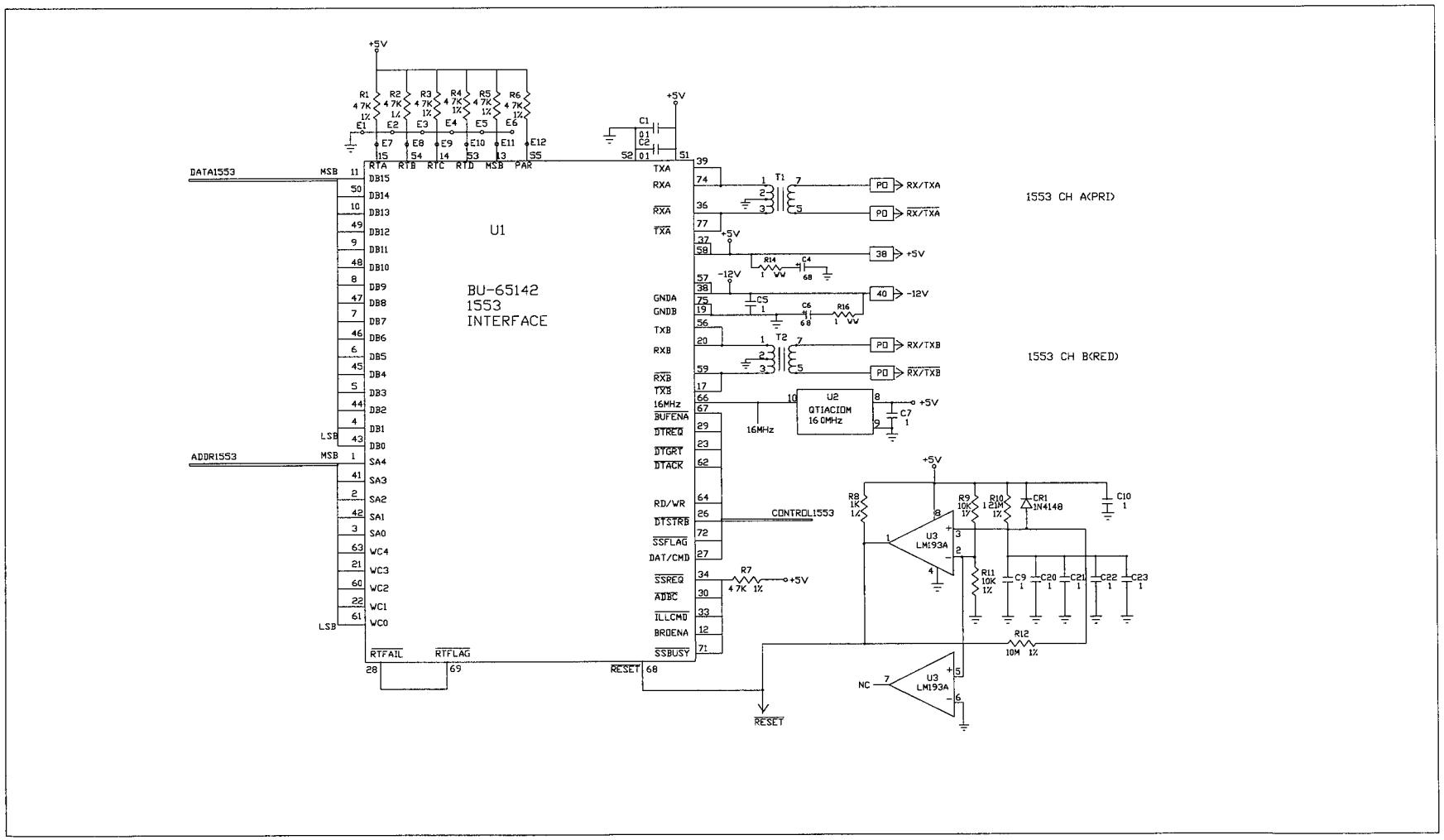

IVM and NWM Digital Controllers Dual Port RAM C/NOFS

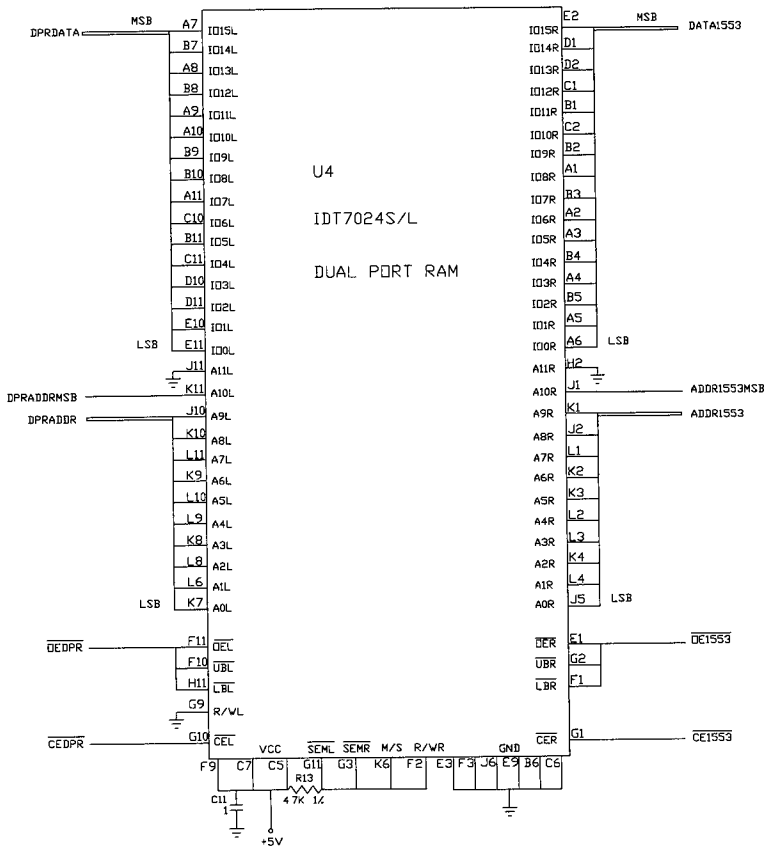

IVM and NWM Digital Controllers Control PROM

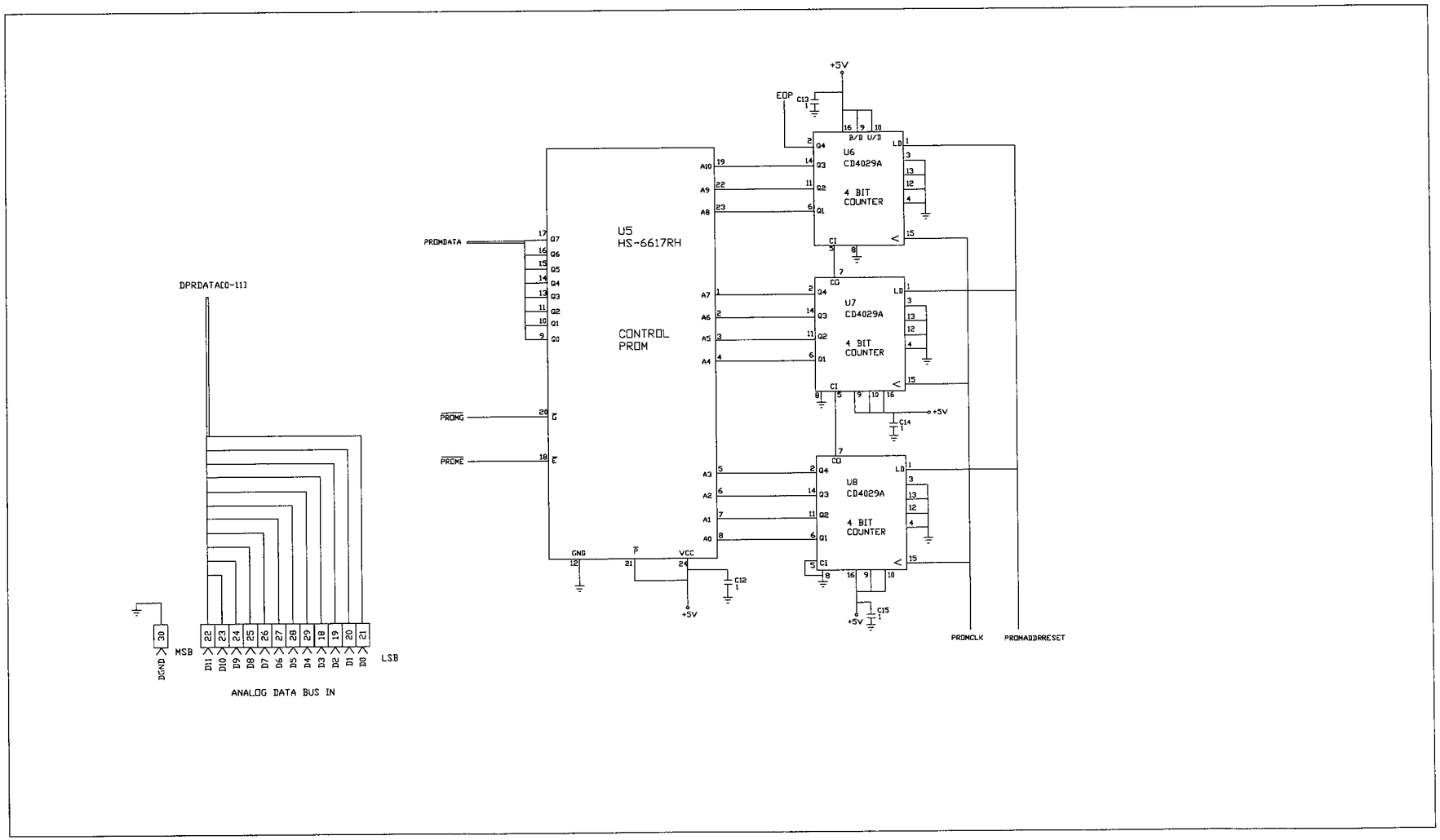

IVM Digital Controller FPGA

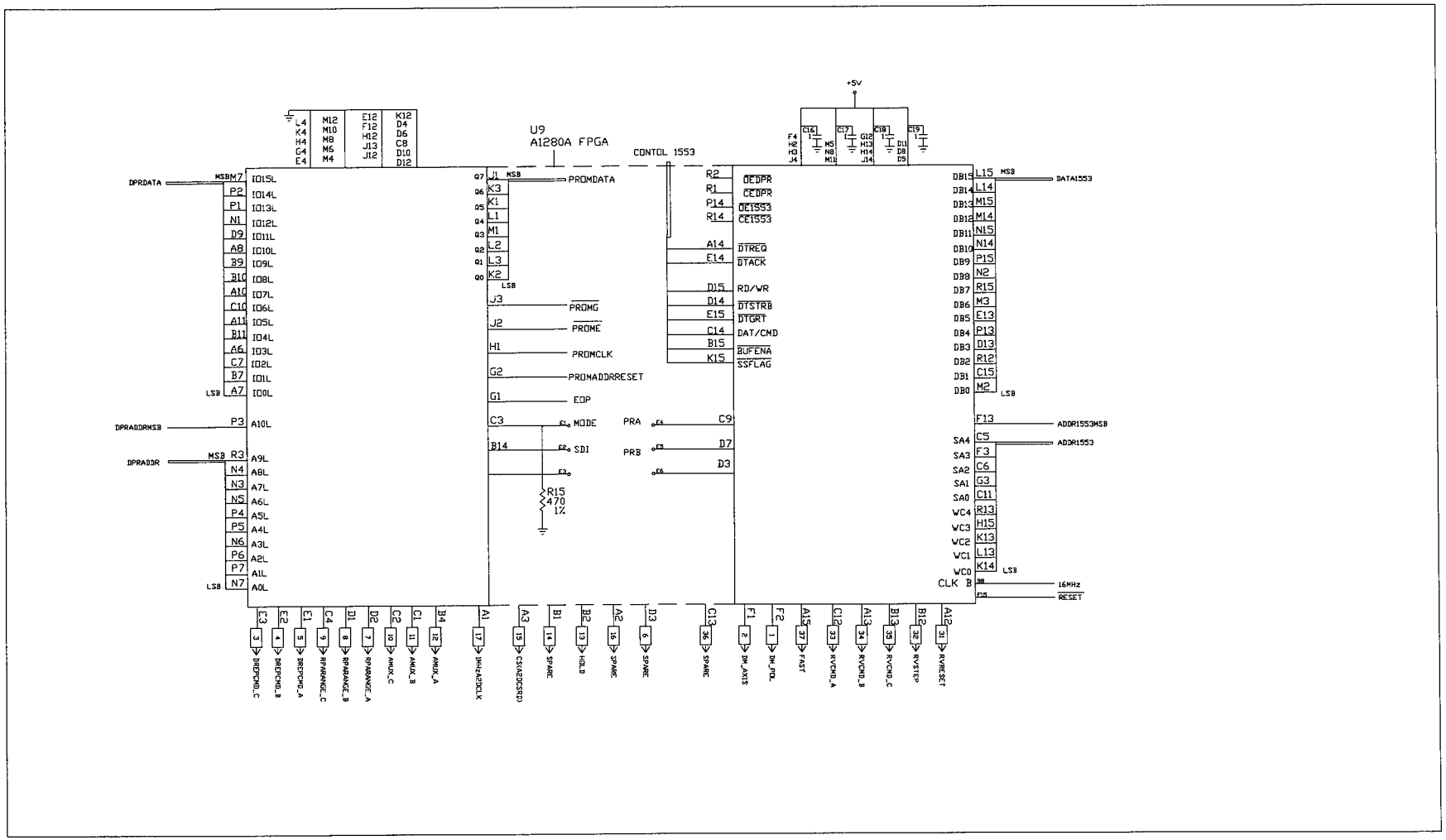

NWM Digital Controller EBOX-3 FPGA

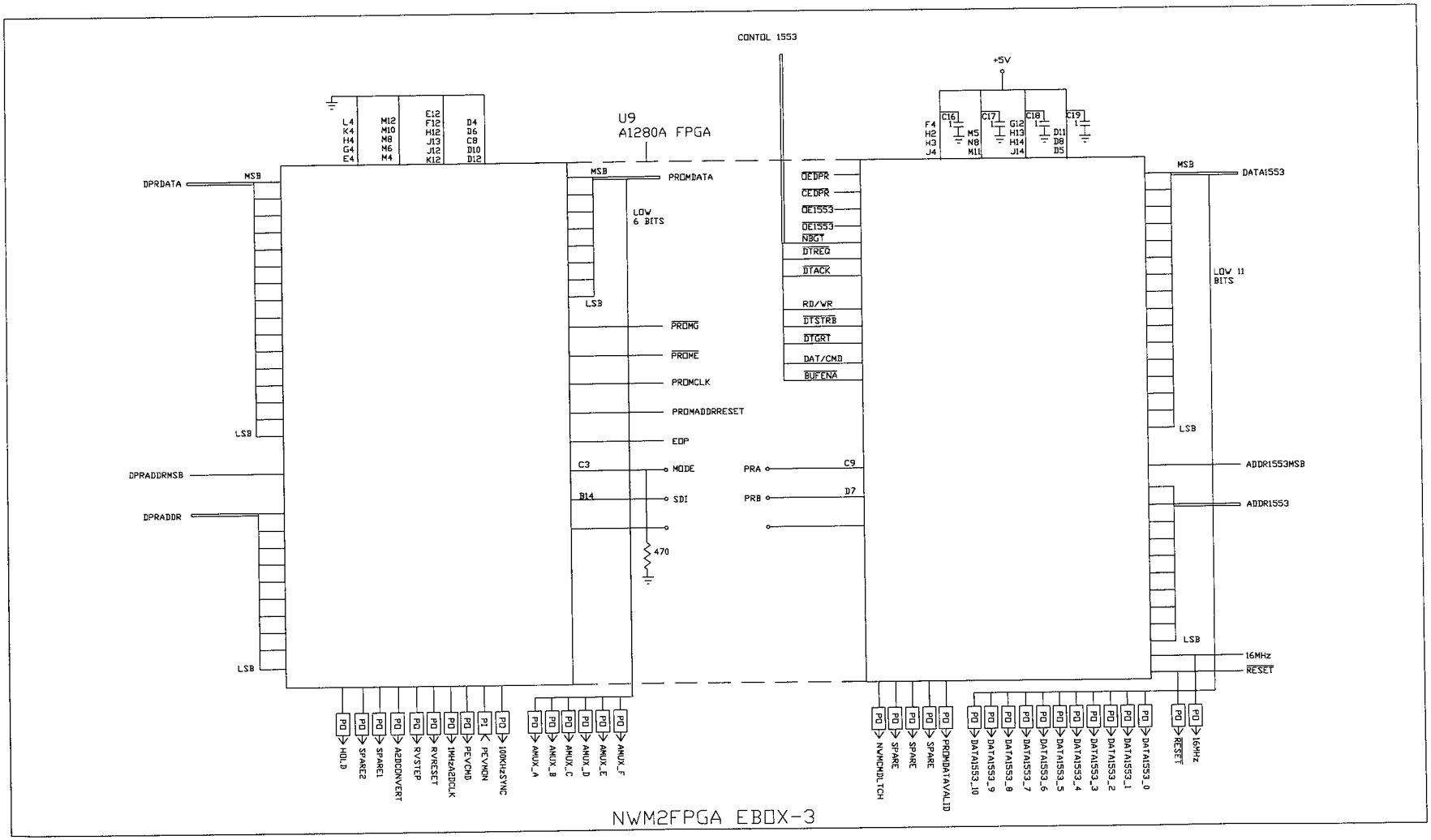

NWM Digital Controller EBOX-2

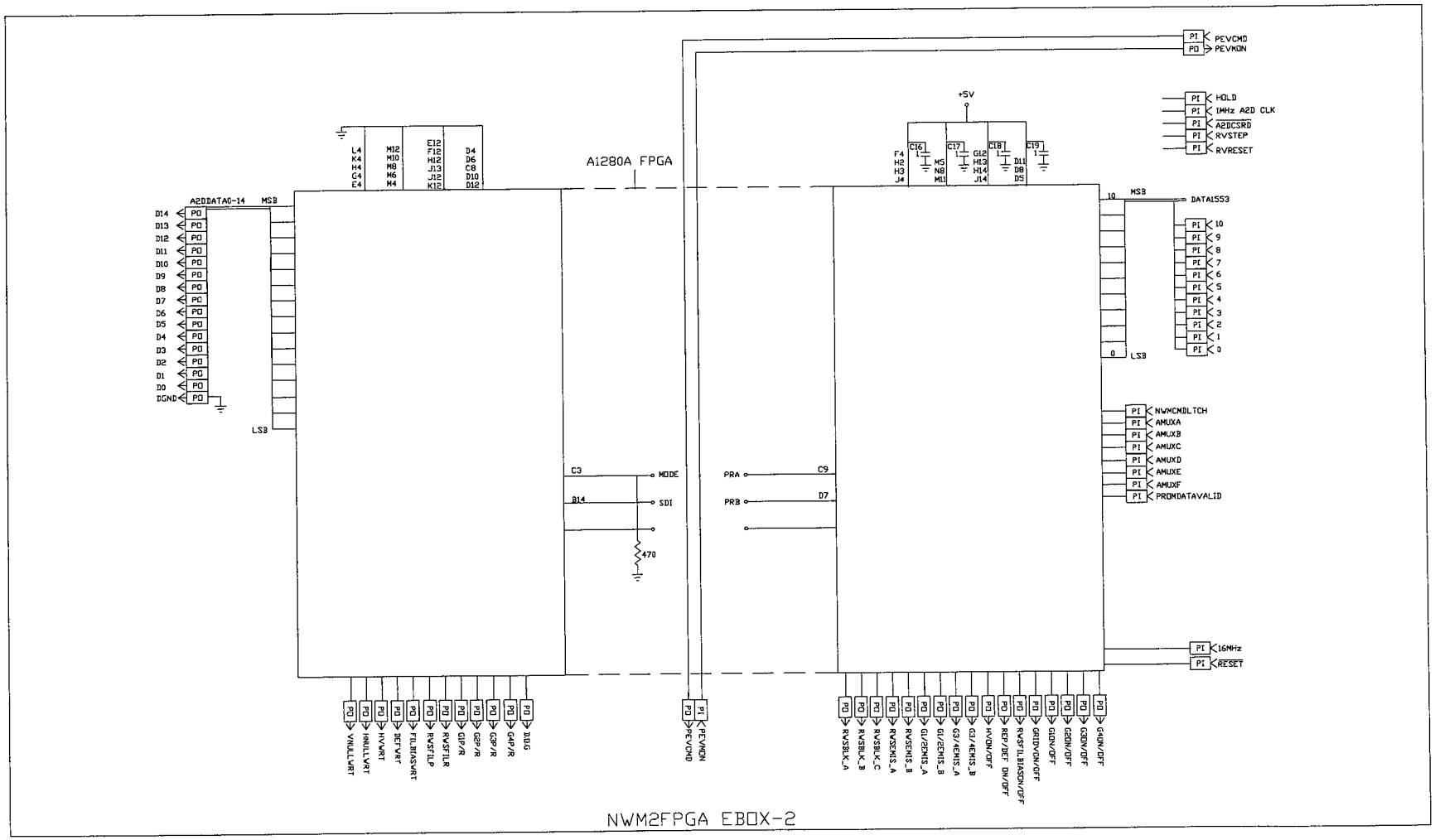

BCE/GSE

GSE/BCE OVERVIEW

- GSE = Ground Support Equipment
- BCE = Bench Checkout Equipment

- Units
  - RWS BCE - Used for UTD lab testing of RWS without EBox - not delivered
  - XTRK BCE - Used for UTD lab testing of XTRK without EBox - not delivered
  - IVM GSE - Used for UTD IVM system testing and testing at AFRL and SA
  - NWM GSE - Used for UTD NWM system testing and testing at AFRL and SA

GSE/BCE STATUS

- XTRK BCE complete and tested
- RWS BCE complete and tested
- One GSE complete and tested
- Second GSE nearing completion
- GSE software development is on schedule
    - GSE software/timing verification test shortly after CDR

BCE FUNCTIONS

- Support RWS or XTRK sensor operation/testing without 1553 interface/EBOX
- Provide:
  - Adjustable +28V, fixed ±12V, fixed +5V, +28V return, power on/off switching
  - Test points with integrated voltmeter
  - Sensor mode control
  - Filament power key switch protection
  - Power supply current monitoring

RWS BCE FUNCTIONAL DIAGRAM

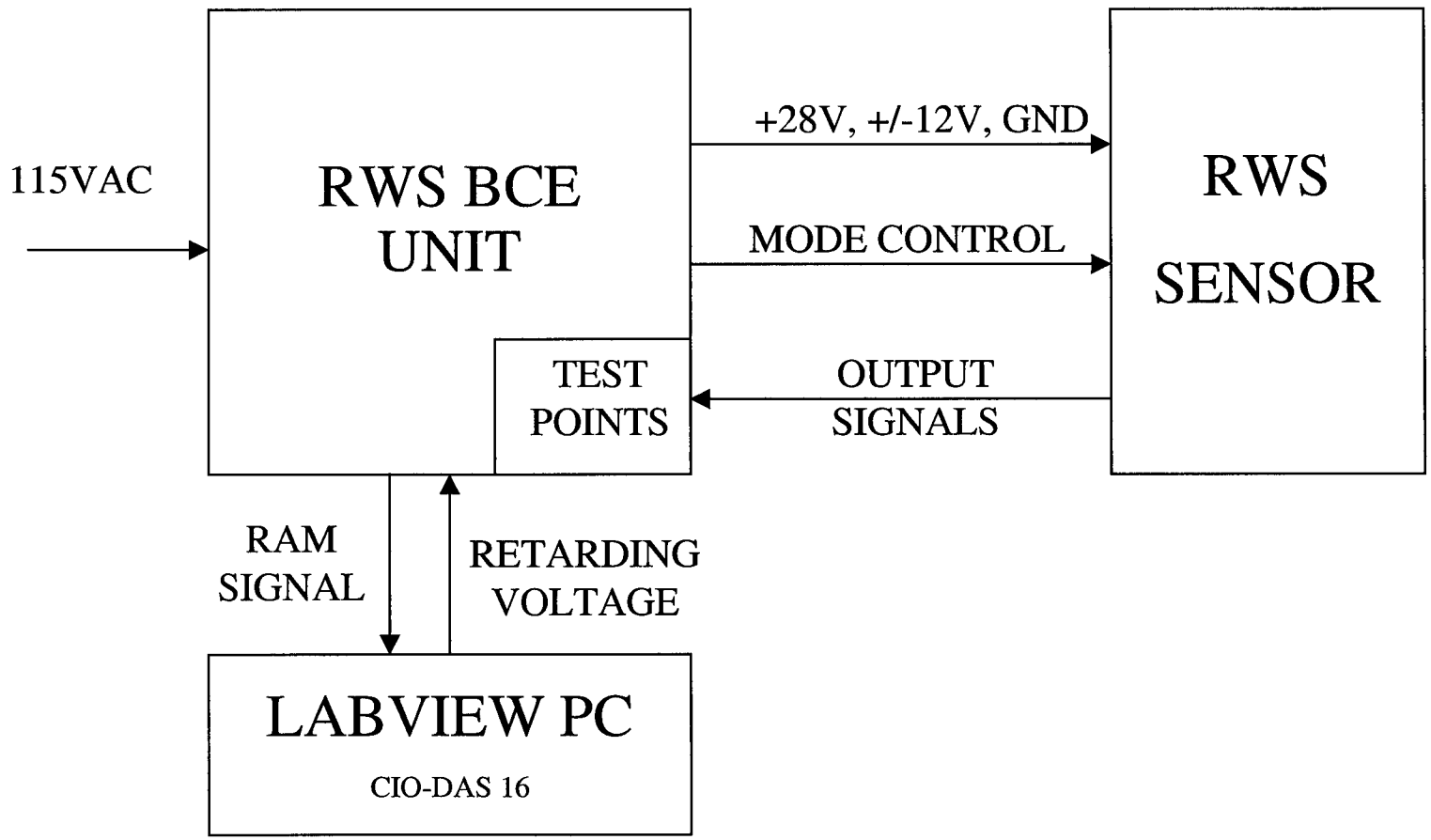

RWS BCE SCHEMATIC

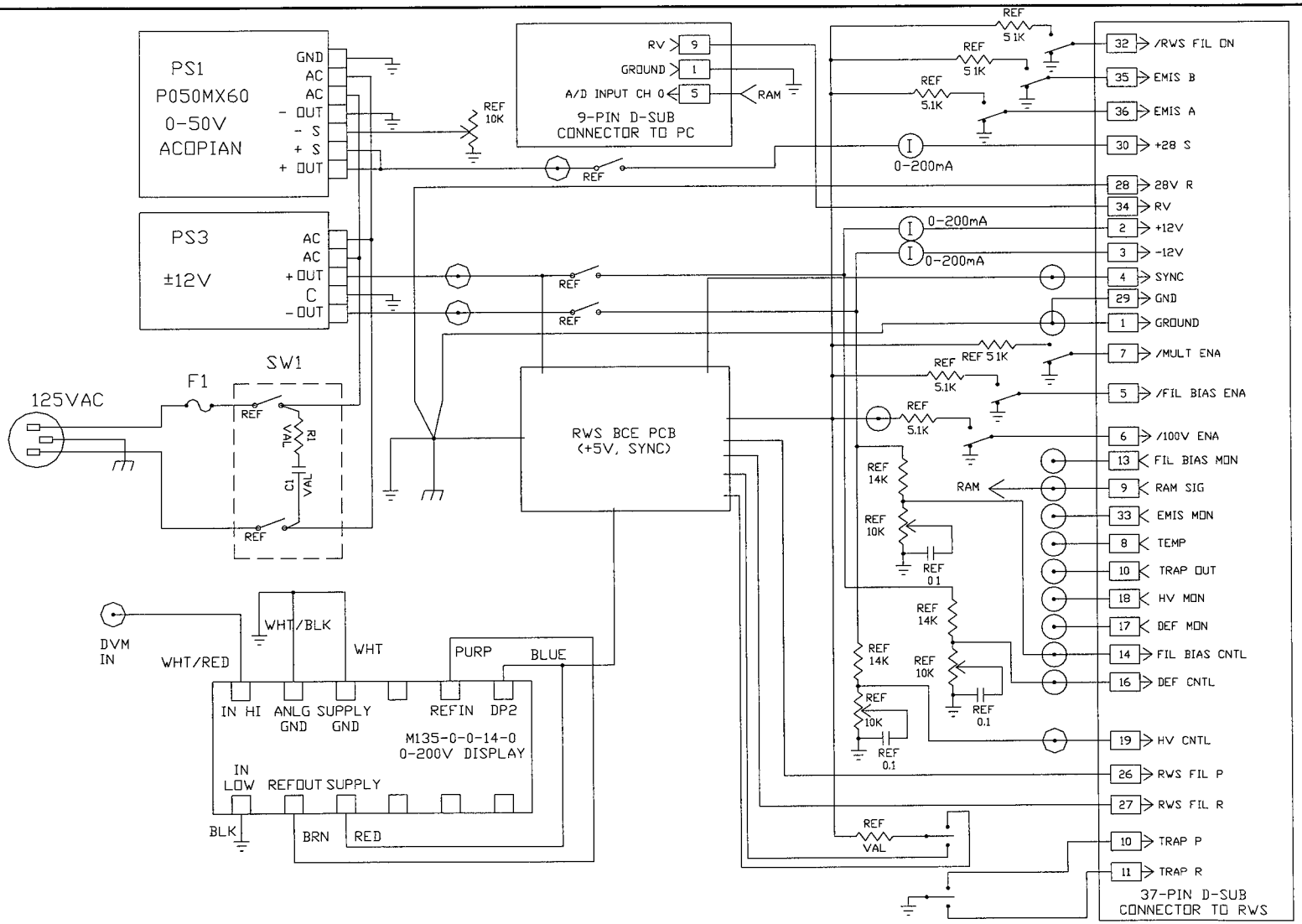

RWS BCE UNIT PANEL LAYOUT

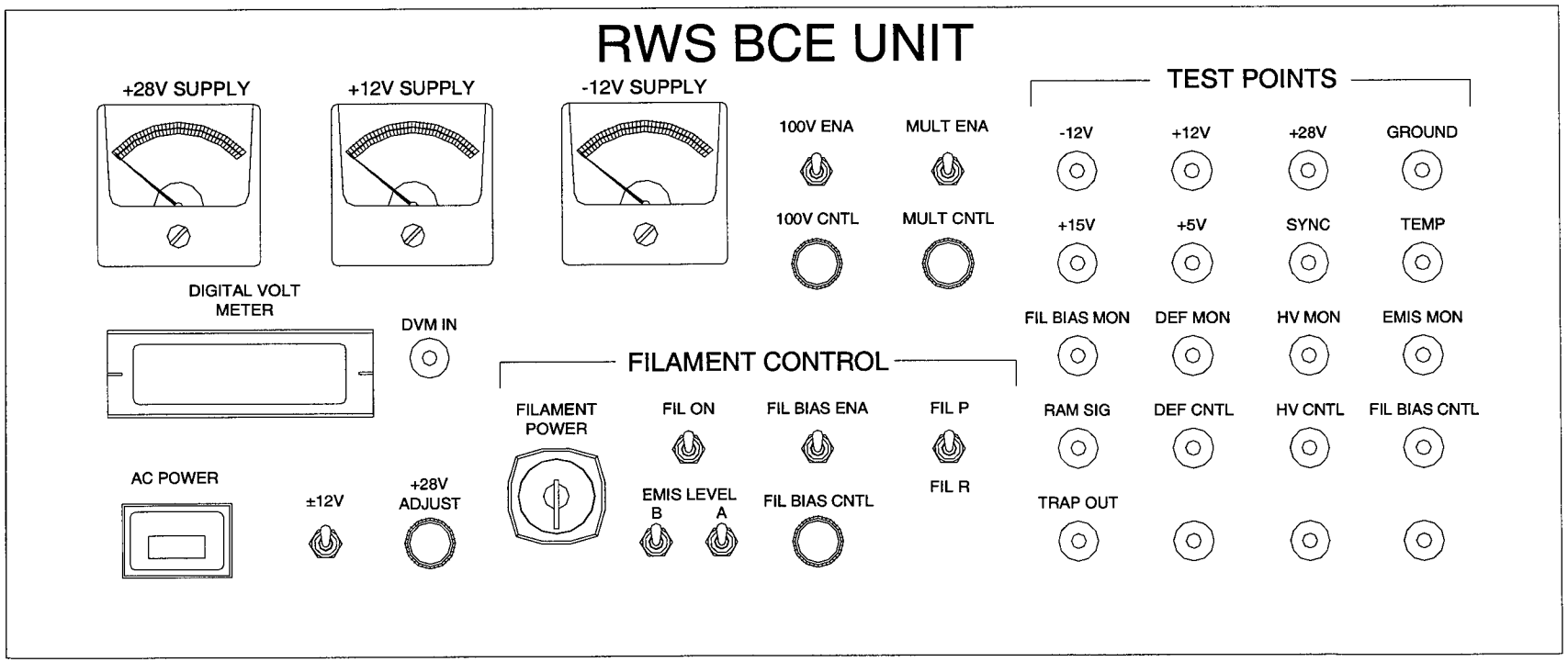

XTRK BCE FUNCTIONAL DIAGRAM

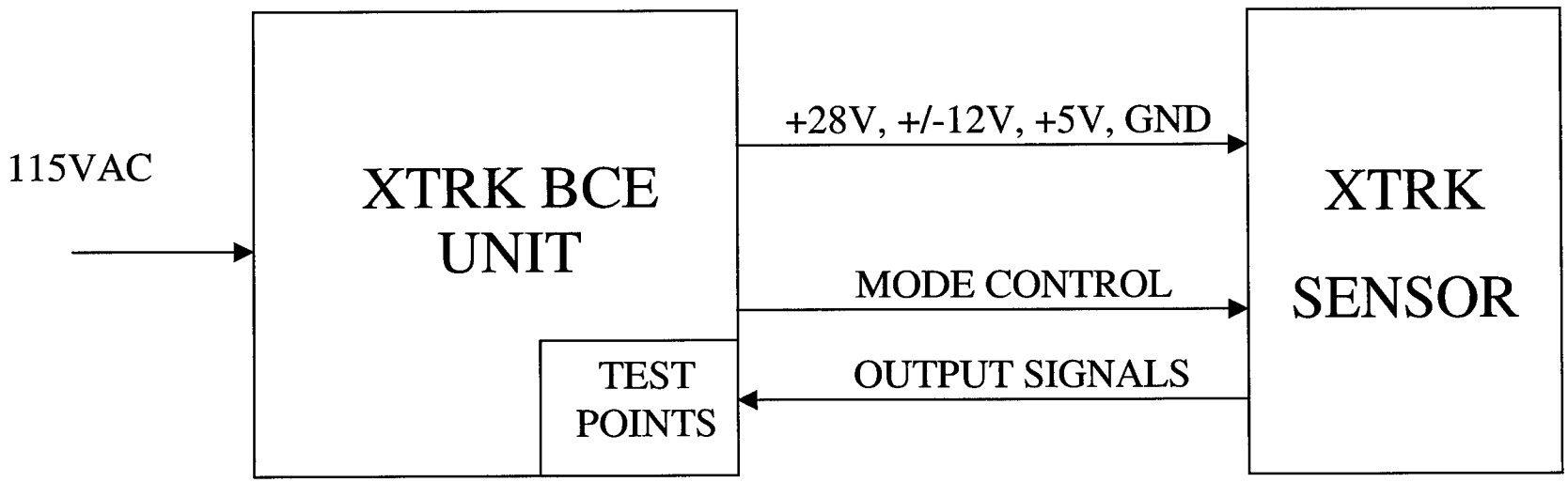

XTRK BCE SCHEMATIC

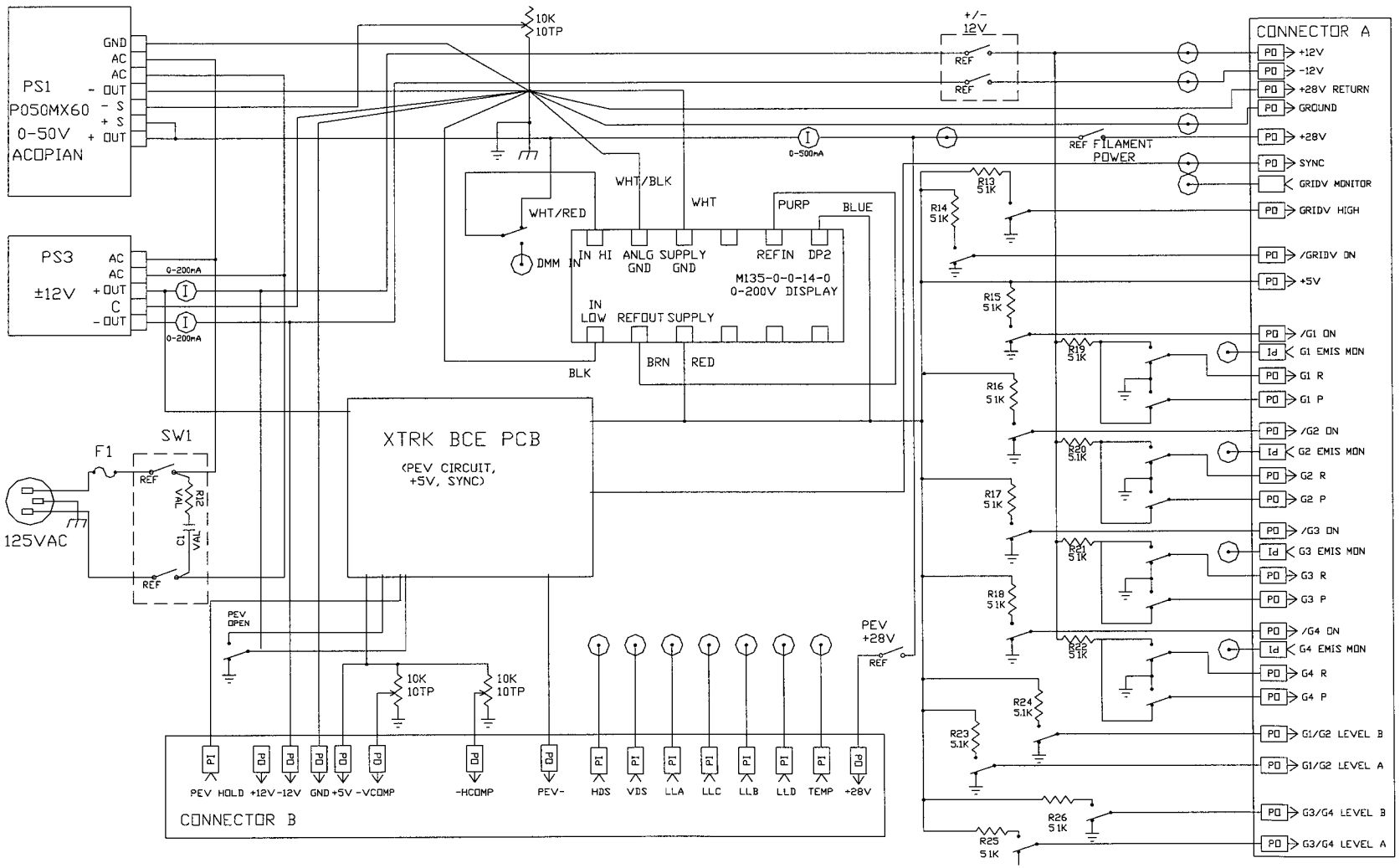

XTRK BCE PANEL LAYOUT

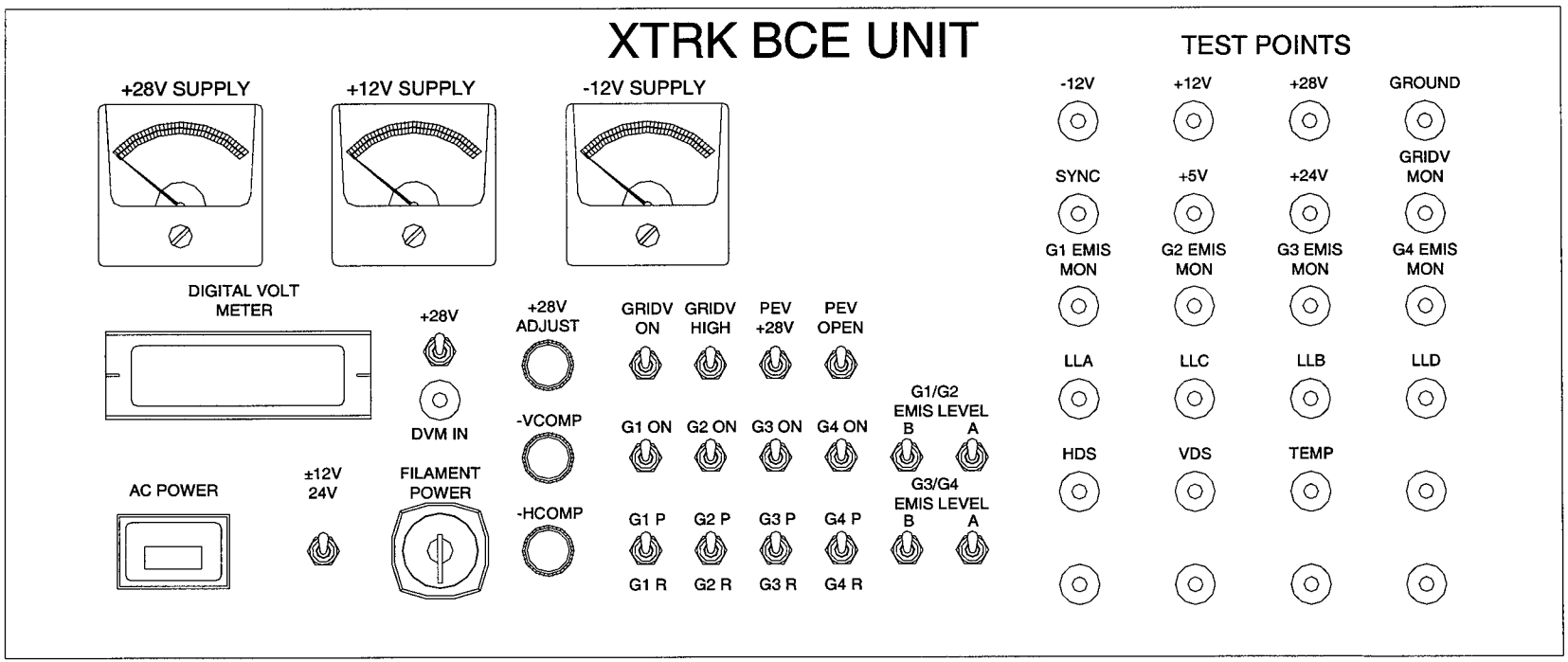

IVM/NWM GSE UNIT OVERVIEW

- Two identical and interchangeable GSE units
- Provide +28V power - simulate S/C power switching using debounced solid state relays
- Filament power safety switch for NWM
- BC 1553 interface emulation and data display software packages
- Facilitates troubleshooting and sensor test calibration
- Battery-powered "Stealth" mode

IVM/NWM GSE SOFTWARE OVERVIEW

- Separate DOS based software packages for IVM and NWM
- Coded in C
- Modified ROCSAT GSE programs
- Emulation of S/C 1553 BC timing, time code broadcasting, and data acquisition cycle scheduling
- Scheduled command execution
- Collect science data packets and SOH data
- Standardized data print and screen display
- Provide data plots

IVM/NWM GSE FUNCTIONAL DIAGRAM

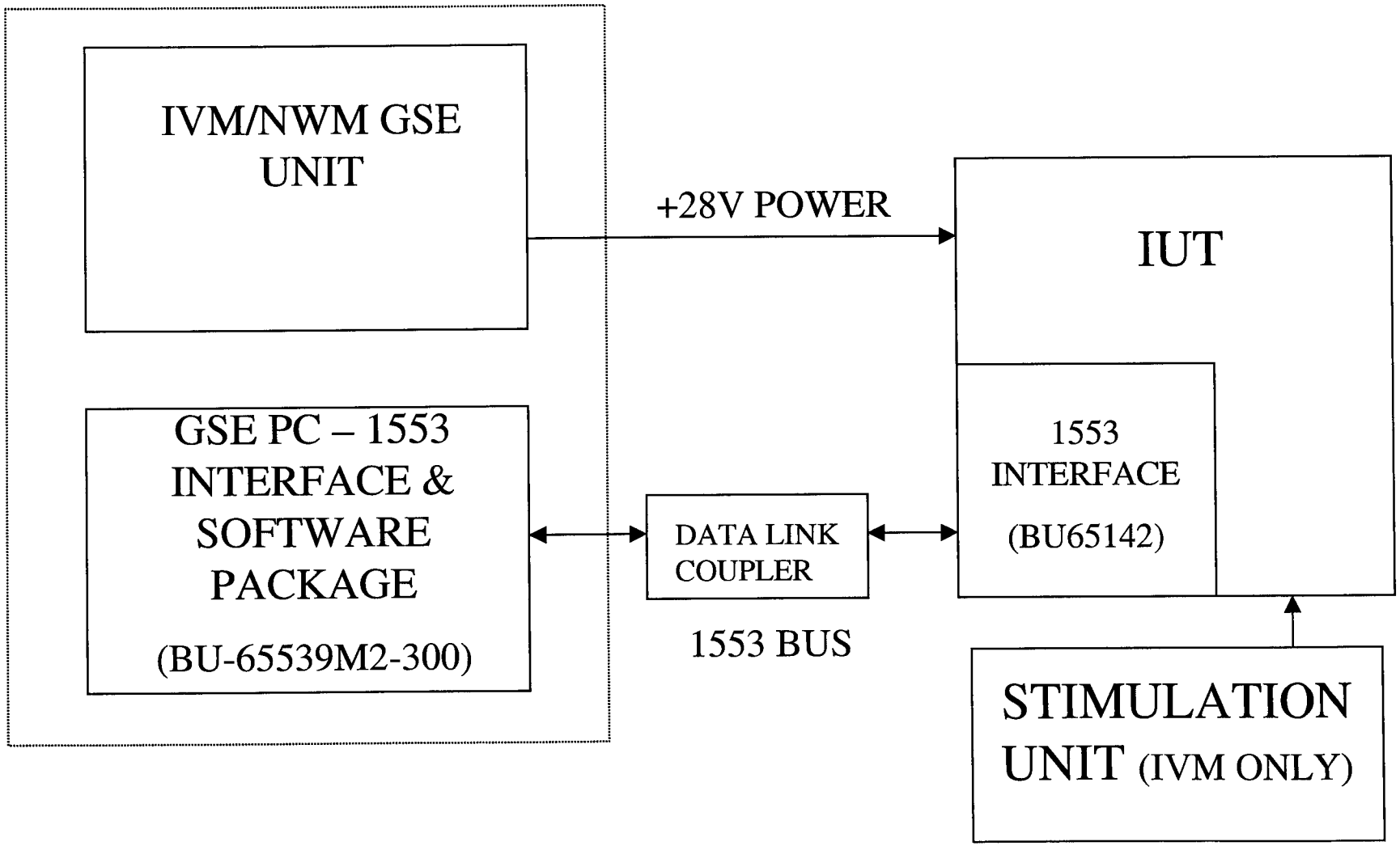

IVM/NWM GSE SCHEMATIC

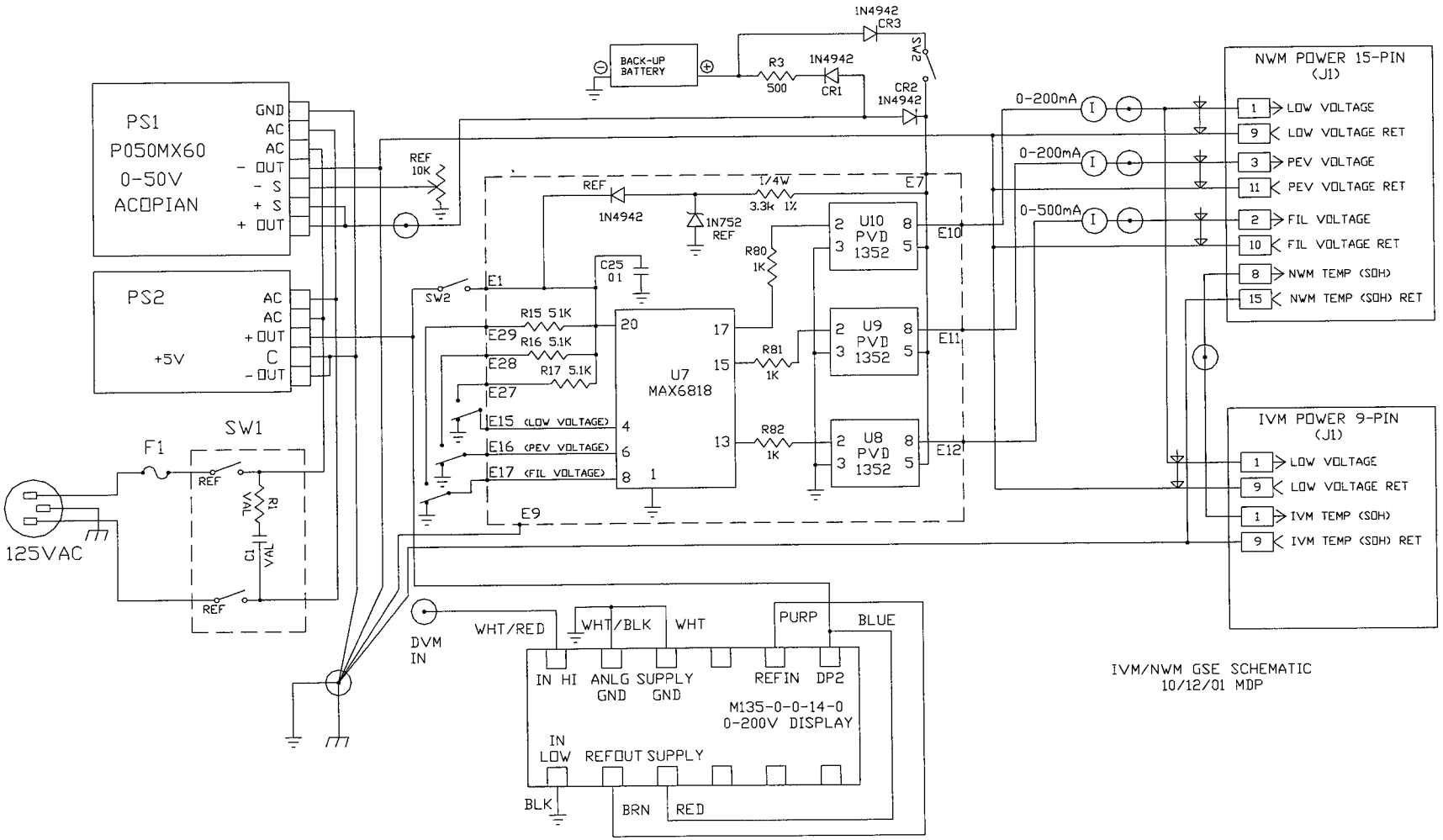

IVM/NWM GSE SCHEMATIC
10/12/01 MDP

IVM/NWM GSE PANEL LAYOUT

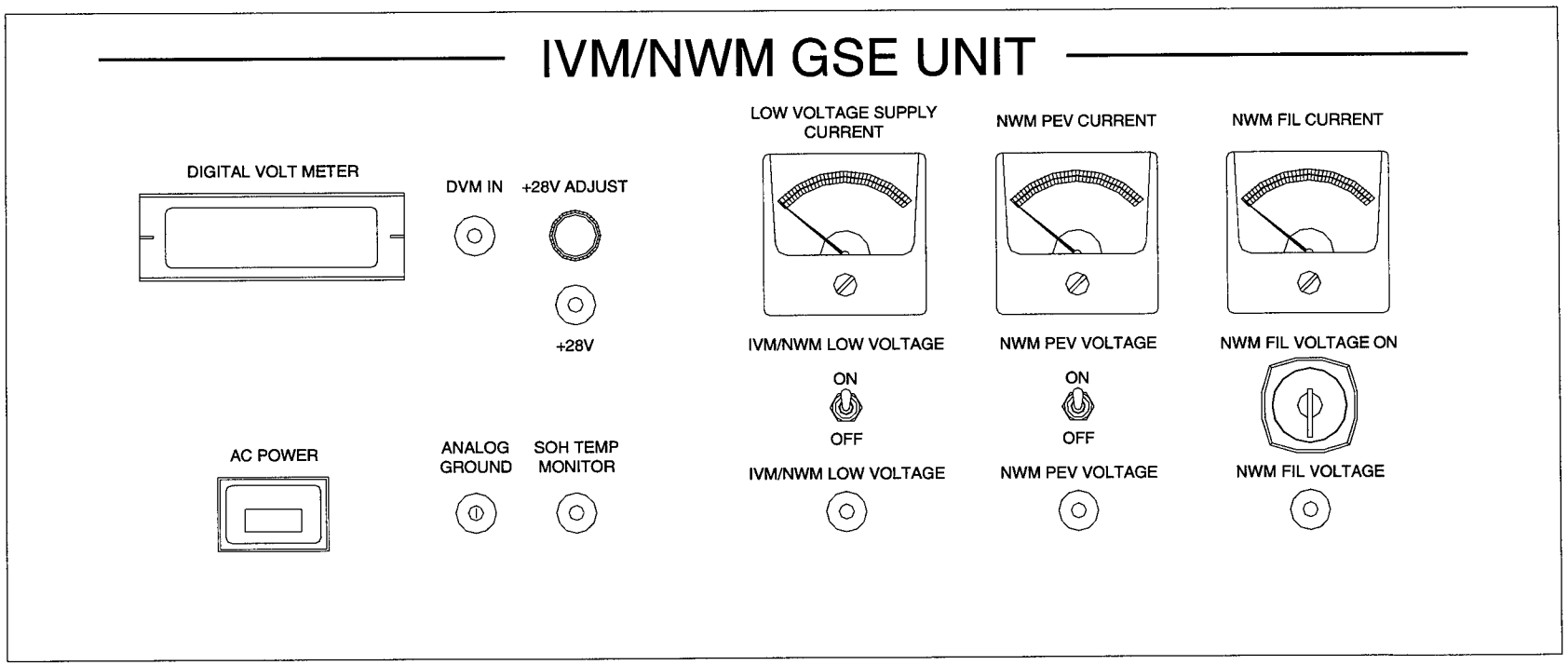

IVM STIMULATION UNIT SCHEMATIC

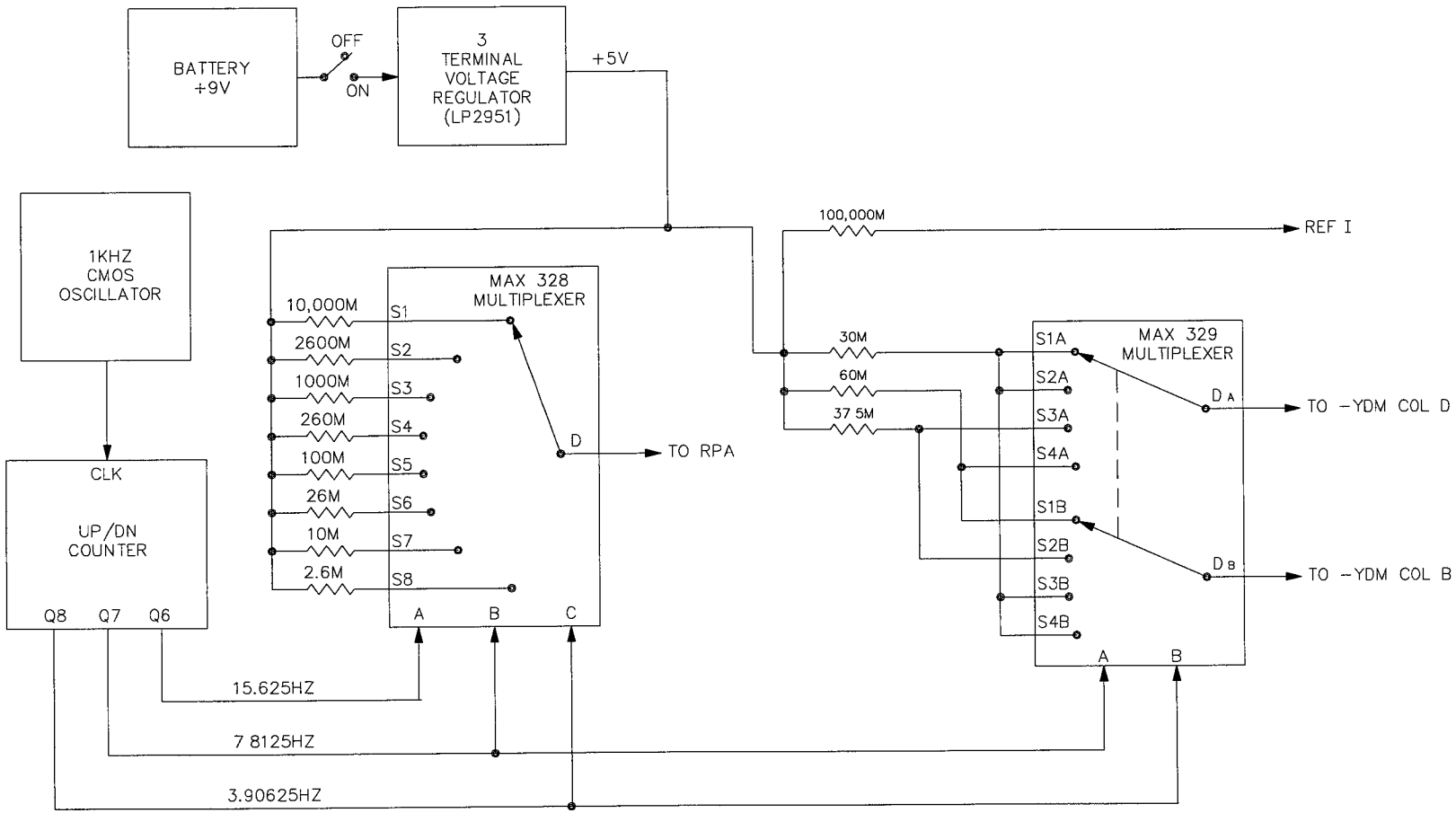

STIMULATION CONFIGURATION
ION VELOCITY METER

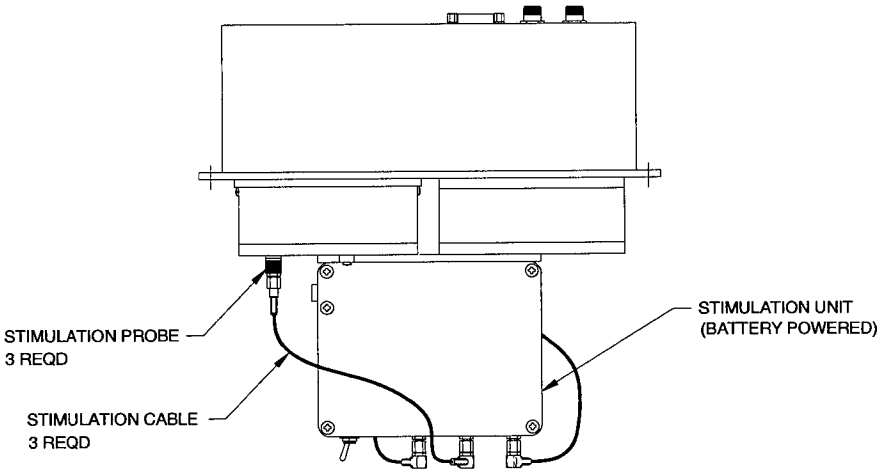

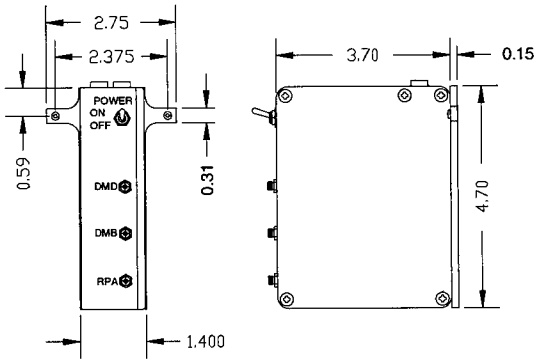

STIMULATION UNIT DETAIL

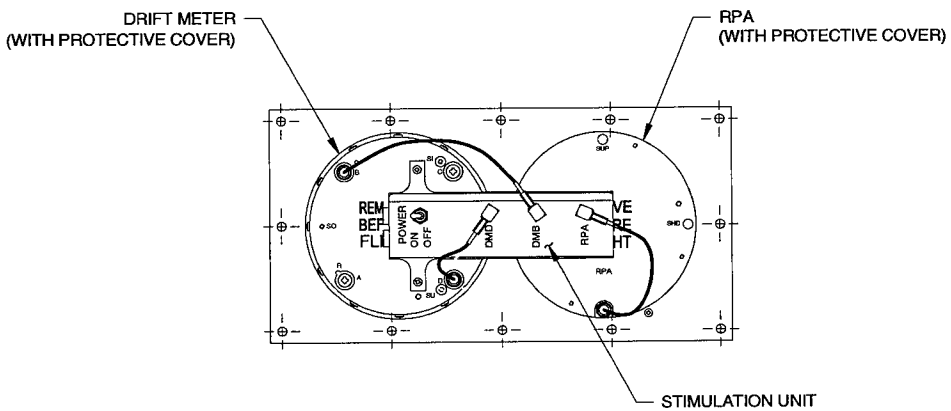

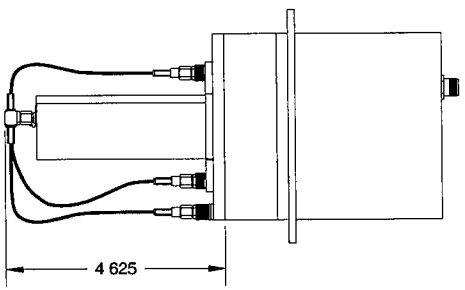

PARTS/MATERIALS

IVM/NWM MATERIALS LIST

- Utilized past program experience
- NASA RP-1124 database used for outgassing info
- GSFC materials branch characterized "new Kel-F" (PCTFE)
- Final materials list submitted
- Have responded to C/NOFS hazardous materials list

PARTS QUALITY

- Parts Program per NASA 311-INST-001, Rev A, Level 2
  - Screening/testing performed by the manufacturer is not repeated
  - Upgrade screening of OPA128 to 883B, DPA, PIND
  - Rescreening of HA2640/883B from ROCSAT1 stock
  - PIND on most microcircuits, diodes and transistors
- Class S LM108 used as general purpose op amp – reliability enhancement
- Final Parts Stress Analysis Complete
  - All parts derated per GSFC PPL-21, Notice 1, Appendix B
- Non-standard part approval requests submitted to AFRL/NASA
- Final Parts List submitted to NASA/AF

PARTS STATUS

Part Description	Part Number	Manufacturer	Expected Delivery Date
2.15M 600V Resistor	G311P683-6502154F	Caddock	1/15/02
10M 1kV Resistor	G311P683-6601005F	Caddock	1/15/02
50M 2kV Resistor	G311P683-7155005F	Caddock	1/15/02
1000V 0.01uF Capacitor	87043-49 (CA92-01A)	Novacap	11/30/01
3000V 0.001uF Capacitor	87047-25	Novacap	12/21/01
A/D Converter	7672RP	SEI	12/31/01
D/A Converter	7545ARP	SEI	12/31/01
Power MOSFET	FSL234R3	Fairchild	12/15/01
1553 RT	BU-65142D2-130Y	DDC	12/31/01
12V DC/DC SINGLE	MCH2812S/883	Interpoint	12/7/01
CMOS Logic	CD40109BDMSR	Intersil	1/5/02
CMOS Logic	CD4013BDMSR	Intersil	12/26/01
Diode	JANTXV2N930	Microsemi	11/30/01
High Voltage Rectifier Diode	HRF30	Semtech	11/21/01
Mil Transformer	M21038/27-01 (B-2204)	Beta	12/10/01
Supermetallized Cap (30V)	M87217/01-1171A	CRC	11/23/01
Supermetallized Cap (30V)	M87217/01-1225A	CRC	11/23/01
Supermetallized Cap (30V)	M87217/01-1237A	CRC	11/23/01

Spare Parts Policy: 10% or 2 parts

IVM/NWM RELIABILITY ANALYSIS

- Full stress analysis performed using Relex
- MIL-HDBK-217 FN2
- Failure rates calculated using actual stress data

	Ps (1 year)	Ps (2 year)	Ps (3 year)
NWM	0.98677	0.97372	0.96084
IVM	0.99659	0.99319	0.98981

IVM/NWM RELIABILITY ANALYSIS RESULTS

System Name	Failure Rate (#/1E6 hr)	MTBF (hr)	Ps (1 Year)	Ps (2 year)	Ps (3 year)
Neutral Wind Meter	1.55835	641703	0.98677	0.97372	0.96084
EBOX Unit	0.45584	2193730	0.99611	0.99224	0.98838
EBOX Board 1	0.10729	9320730	0.99908	0.99817	0.99725
EBOX Board 2	0.19820	5045370	0.99831	0.99662	0.99493
EBOX Board 3	0.15035	6650950	0.99872	0.99743	0.99615
Cross-Track Sensor	0.55946	1787450	0.99523	0.99049	0.98576
XTRK Board 1	0.03947	25335200	0.99966	0.99933	0.99899
XTRK Board 2	0.03927	25466700	0.99966	0.99933	0.99899
XTRK Board 3	0.05481	18243800	0.99953	0.99906	0.99860
XTRK Board 4	0.21295	4695890	0.99818	0.99637	0.99456
XTRK Board 5	0.21295	4695890	0.99818	0.99637	0.99456
Ram Wind Sensor	0.54305	1841440	0.99537	0.99076	0.98618
RWS Board 1	0.06461	15477700	0.99945	0.99890	0.99835
90V PS	0.19461	5138410	0.99834	0.99668	0.99502
100V PS	0.13943	7172000	0.99881	0.99762	0.99643
Multiplier PS	0.14440	6925160	0.99877	0.99754	0.99631
Ion Velocity Meter	0.39971	2501810	0.99659	0.99319	0.98981
IVM Board 1	0.10978	9109400	0.99906	0.99813	0.99719
IVM Board 2	0.12211	8189180	0.99896	0.99792	0.99687
IVM Board 3	0.16782	5958700	0.99857	0.99714	0.99571

PRA UPDATE

See attached file "CINDI PRA_CDR_Status.ppt"

PARTS RADIATION TOLERANCE

- Requirement(13deg,400x710km orbit, 1 year life, 3 year goal)
  - TID – 1.3 Krad for 3 years, 60 mils Al, RDM =2
  - SEE – No SEU for LET = 10, No latchup
- Preliminary Radiation Analysis Complete
  - All parts meet above requirements except Actel A1280A
    - TID 18 Krads
    - SEL LET > 120
    - SEU LET 23-28 for combinatorial (C) modules
    - SEU LET 3-8 for sequential (S) modules – 1 upset each 15 days possible

A1280A SEU MITIGATION

- Implement critical functions in discrete rad-hard logic
- Maximize use of C modules
- Limit S module use to areas where SEU will only cause a brief, tolerable effect
    - No Data loss
    - No Data ambiguity

INTEGRATION AND TEST

INSTRUMENT TEST PLAN

- Individual PWB assembly tests over temperature
- Instrument test/calibration over temperature
    - GSE emulates all electrical interfaces
    - Tests are designed to satisfy IRD verification matrix test requirements
- Functional tests in vacuum, ambient temperature, sensor stimulation with ion source/gas jet
- 200 hours minimum burn-in planned
- Instrument Environmental Testing
    - Tests are designed to satisfy environmental test requirements specified in the PLITP and S/C to Payload ICD(for EMI/EMC testing only)
- Integration with Payload Module at KAFB
- Payload Module integration with S/V at SA
    - Standard functional tests defined for payload module/SV testing

ASSEMBLY/INTEGRATION FLOW AT UTD

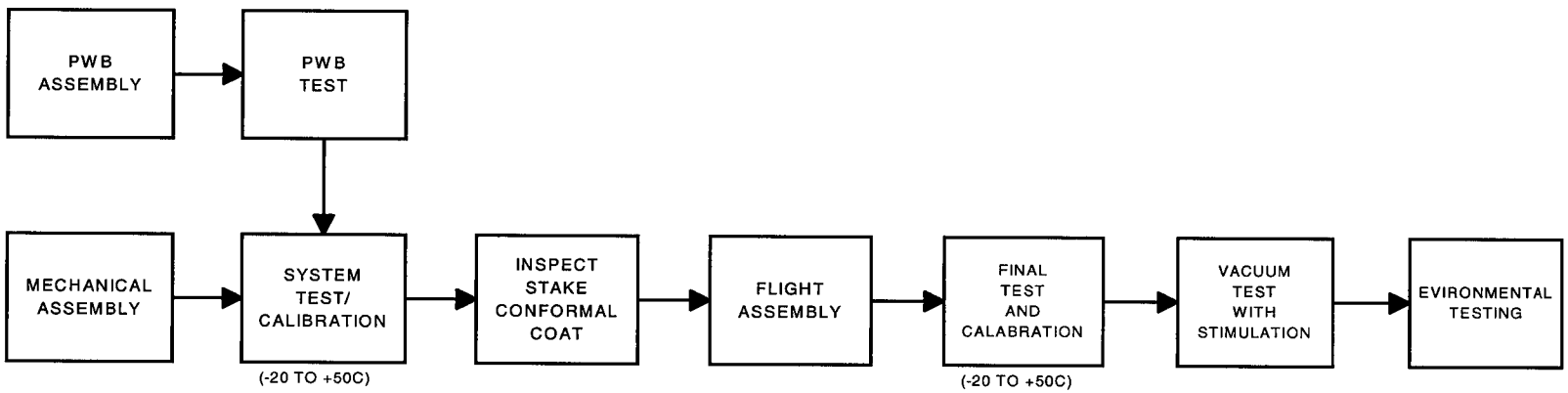

IVM/NWM ENVIRONMENTAL TESTING

- Physical Properties
- EMI/EMC
- Magnetic induction test
- Random Vibration
  - 9.0 GRMS (per AF PLITP)
  - 140 seconds
- Alignment measurements required prior to and after dynamic testing
- Thermal Vacuum
  - 8 Cycles
  - -20C to +50C (operation)
  - -35C to +65C (survival)
- Test sequence follows AF PLITP
- Test procedures will be written by UTD or by test vendors with UTD input and approval

IVM/NWM ENVIRONMENTAL TEST MATRIX

TEST	SPECIFICATION	PROCEDURE
Physical Properties	C/NOFS PLITP	UTD139-710
EMI/EMC	1169-EI-Y25125	UTD139-708
Magnetic Induction	C/NOFS PLITP	UTD139-711
Random Vibration	C/NOFS PLITP	UTD139-712
Thermal Vacuum	C/NOFS PLITP	UTD139-709

PLITP - Payload Integration and Test Procedure, Document No. CNOFS-0001-001

1169-EI-Y25125 - SAI Spacecraft to Payload ICD

ENVIRONMENTAL TEST FLOW DIAGRAM

CINDI Instrument Level Environmental Test Flow

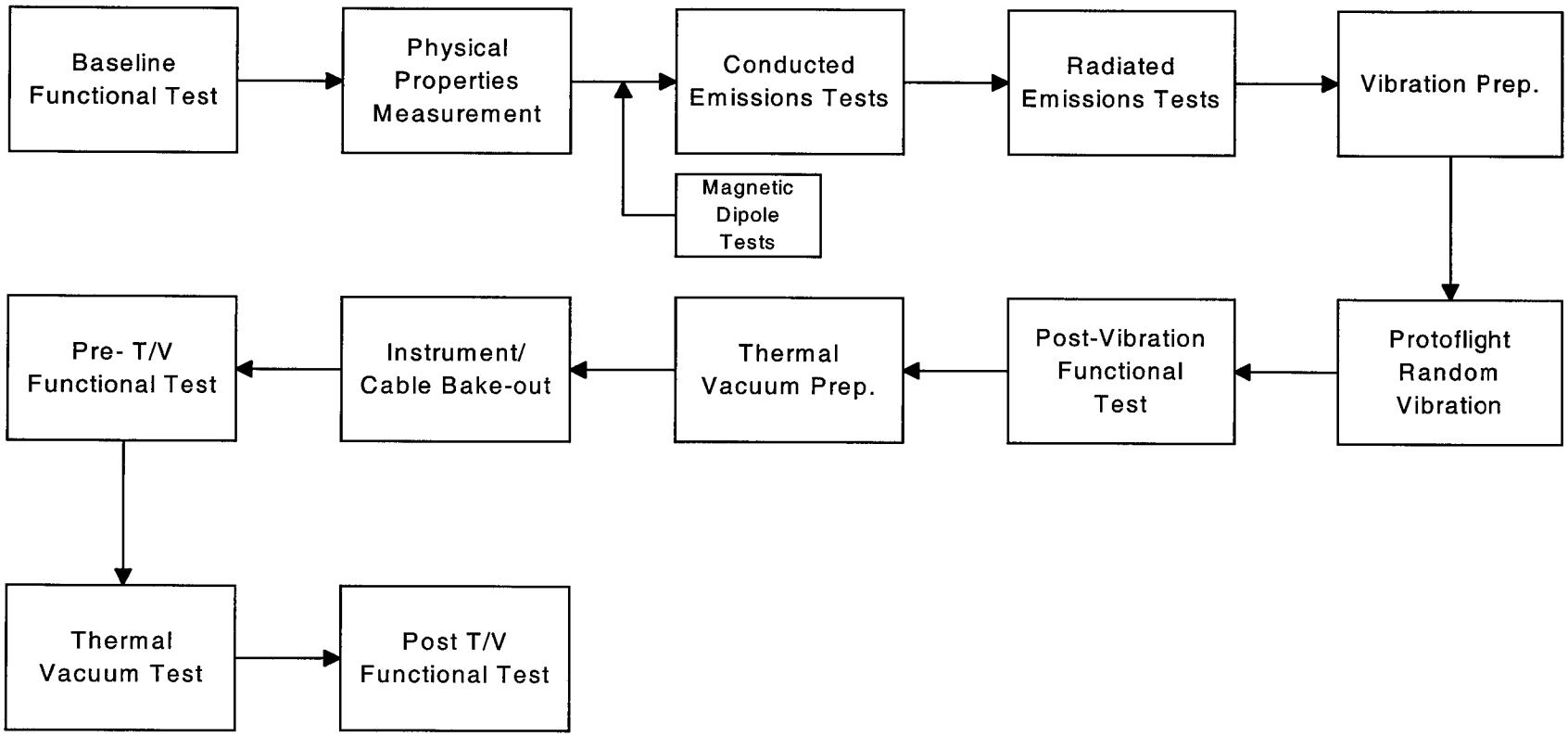

Note: CINDI Instruments will not be subjected to instrument level thermal cycling.

SV I&T AND LV INTEGRATION REQUIREMENTS

- Maintain nitrogen backfill in NWM sensors
  - No purge
  - Cover removed by UTD only
- White glove handling
- Class 100k OK with covers installed
- Relative humidity 30 to75%
- Small, battery powered stimulation unit for IVM
  - Special test by UTD personnel
- Check NWM HV/filaments under vacuum after SV environmental tests
- No special needs during launch ops.

POTENTIAL HAZARDS

- No personnel hazards
- Remove Before Flight aperture covers to protect delicate grids
- NWM high voltage and filaments off except for special tests under vacuum
  - Protected by Red Tag Fil/HV Disable Shorting Plug

MECHANICAL ALIGNMENT

- Alignment requirements - IVM, RWS, CTS
- Boresight accumulated maximum error - ±2° wrt SV velocity vector (mechanical placement, SV attitude control and knowledge)
    - Pointing knowledge within 0.1°
- Alignment accomplished by controlling SV ram direction and instrument sensor mounting interfaces wrt the SV velocity vector
- Alignment measured by:
    - Temporarily mounting alignment mirrors to IVM driftmeter, RWS and XTRKS
    - Measuring pitch and yaw angle of mirror wrt the satellite ram direction reference
    - Roll angle controlled to < 2° by SV and sensor mounting hole patterns - roll angle not measured
- Measurements required prior to and after dynamic testing
- NWM EBox does not require alignment or measurement

POINTING ALIGNMENT MEASUREMENT

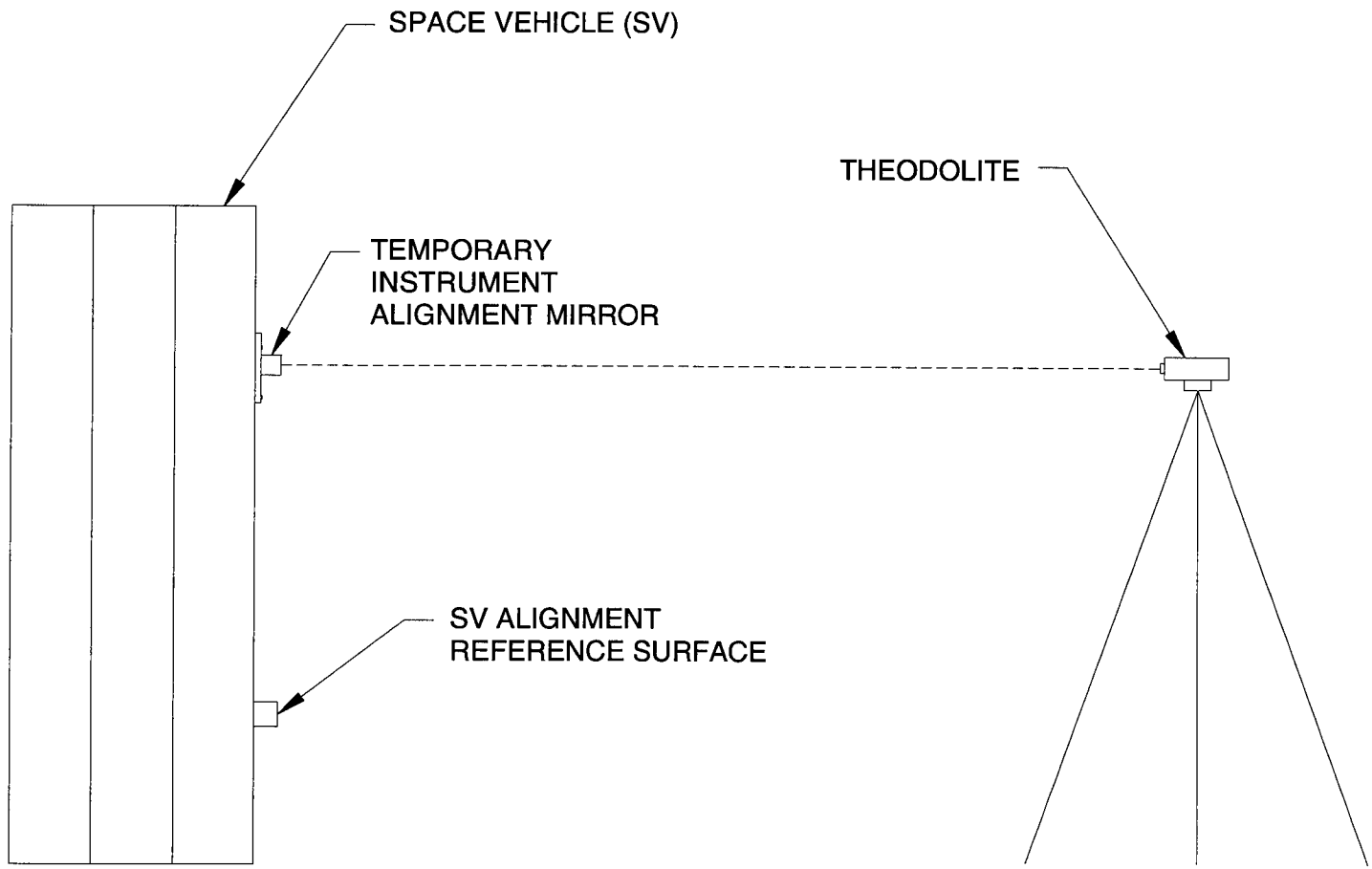

ALIGNMENT MIRROR ASSEMBLY

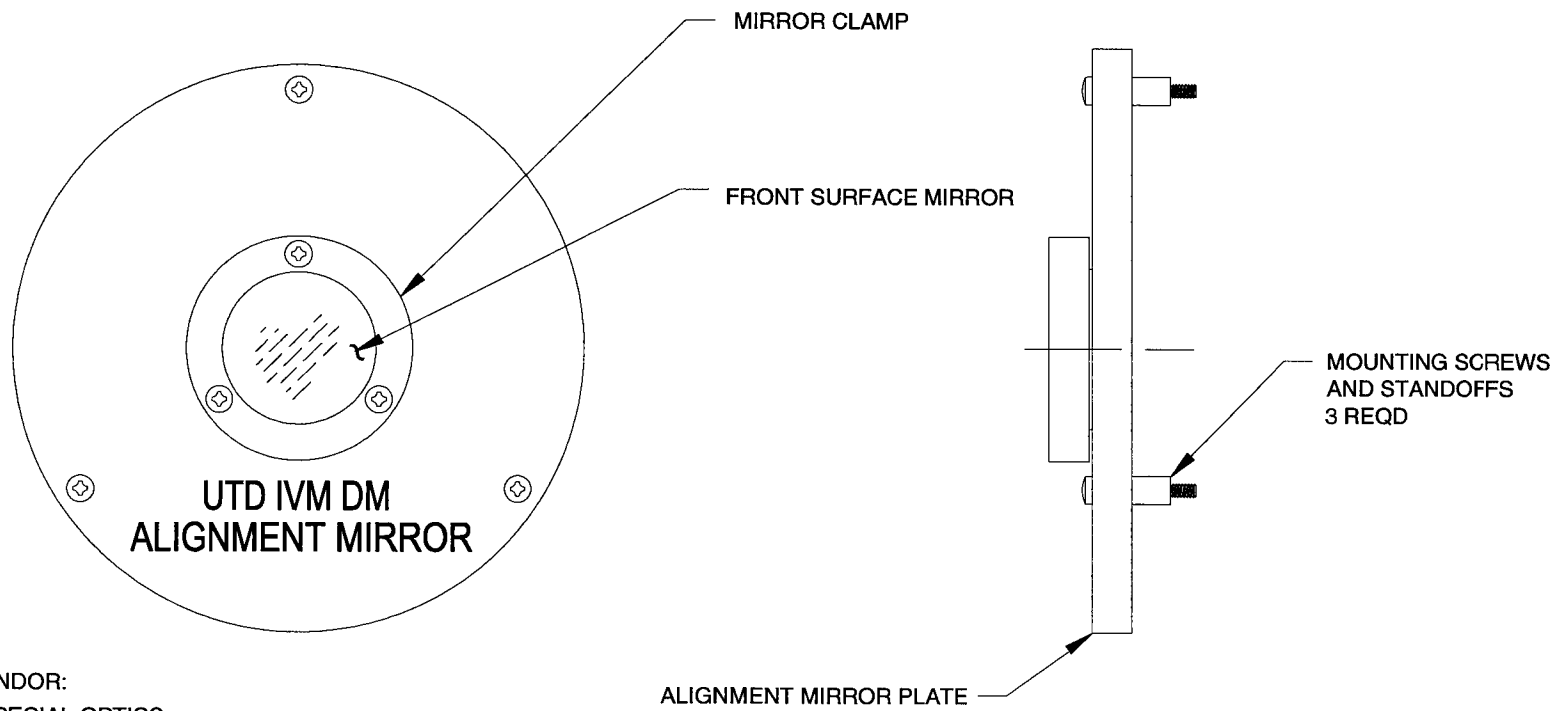

VENDOR:

SPECIAL OPTICS
P.O. BOX 163
LITTLE FALLS, N.J., 02424

PART NO. 3-3025, FRONT SURFACE MIRROR,
GLASS, CLASS III, 1.00" DIA X 1/4" THICK
STANDARD ALUMINUM

ION VELOCITY METER ALIGNMENT MIRROR CONFIGURATION

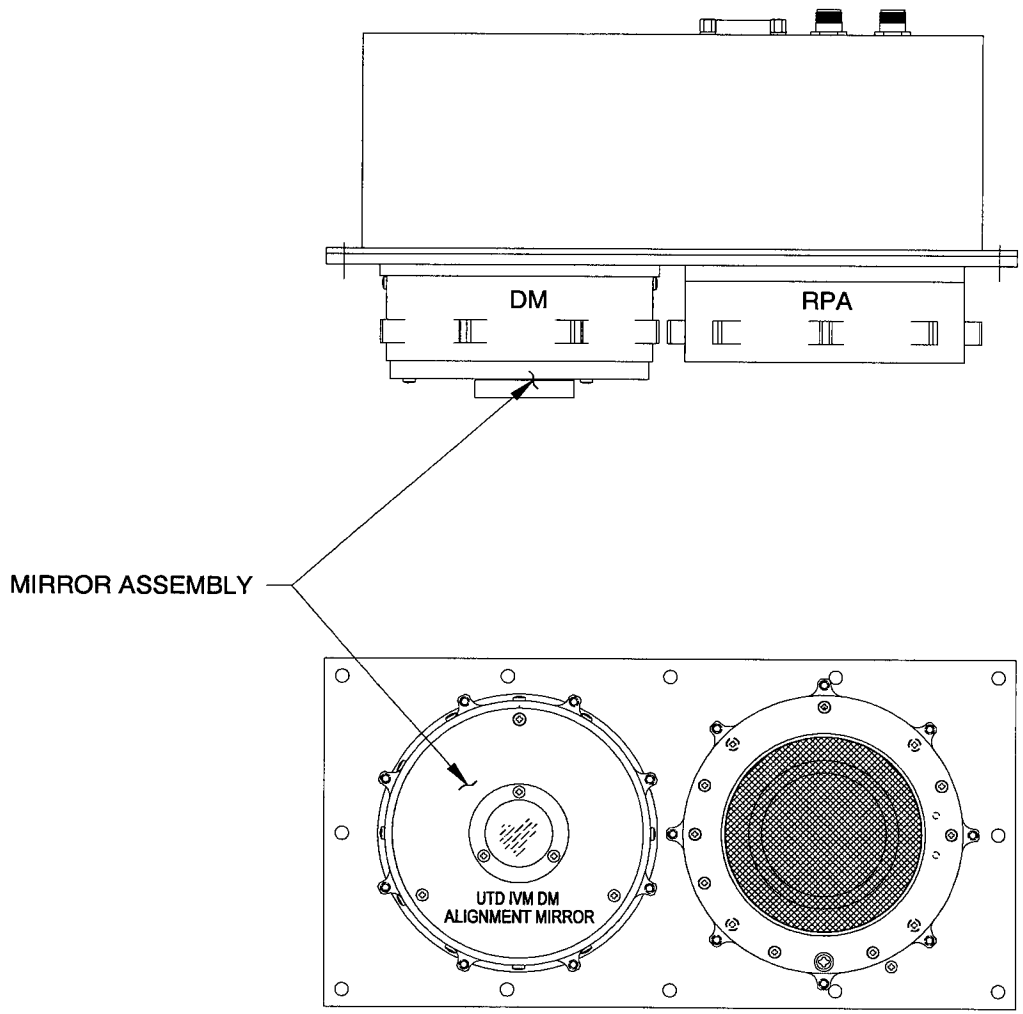

NWM CROSS-TRACK WIND SENSOR ALIGNMENT MIRROR CONFIGURATION

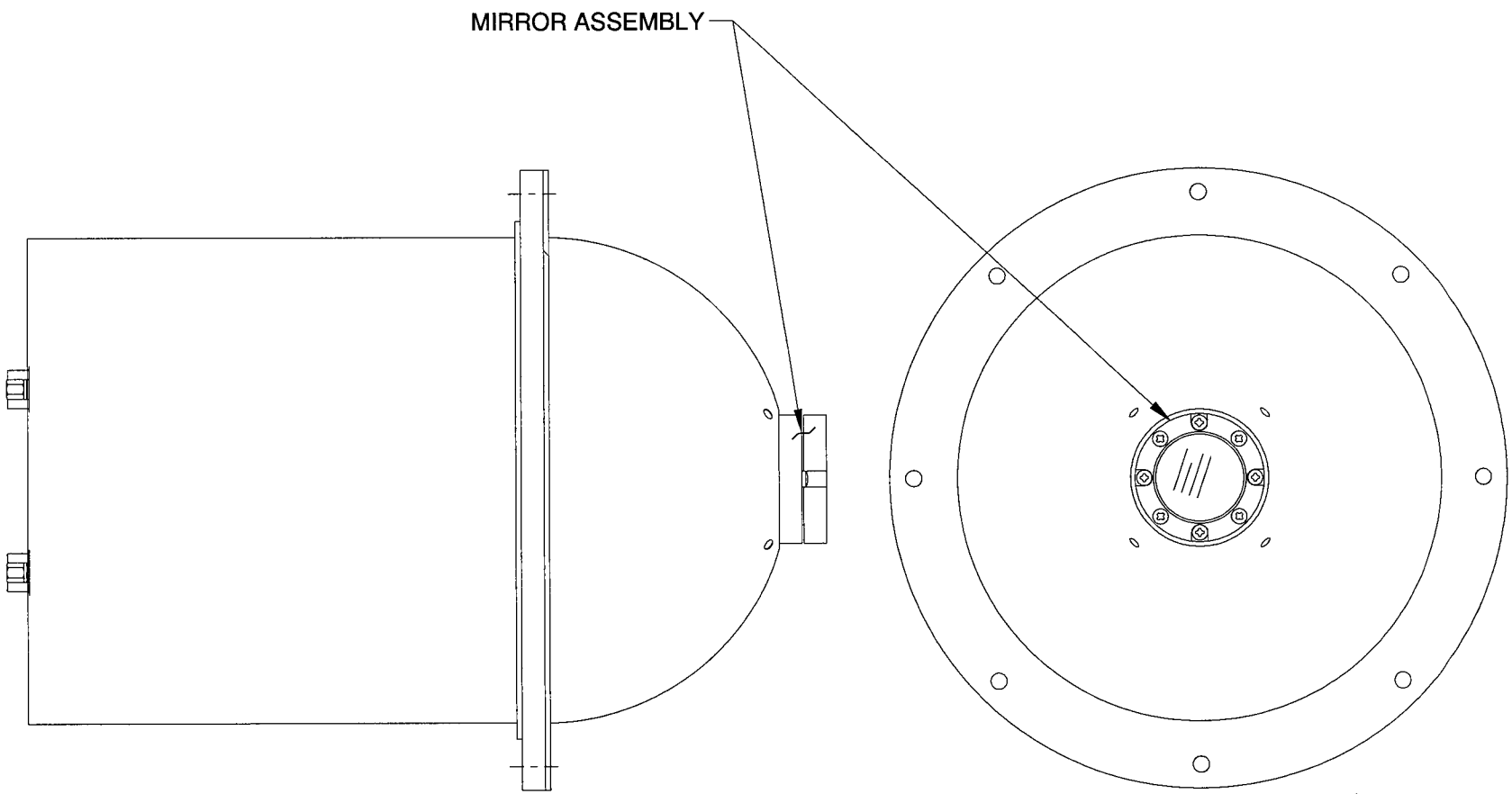

NWM RAM WIND SENSOR ALIGNMENT MIRROR CONFIGURATION

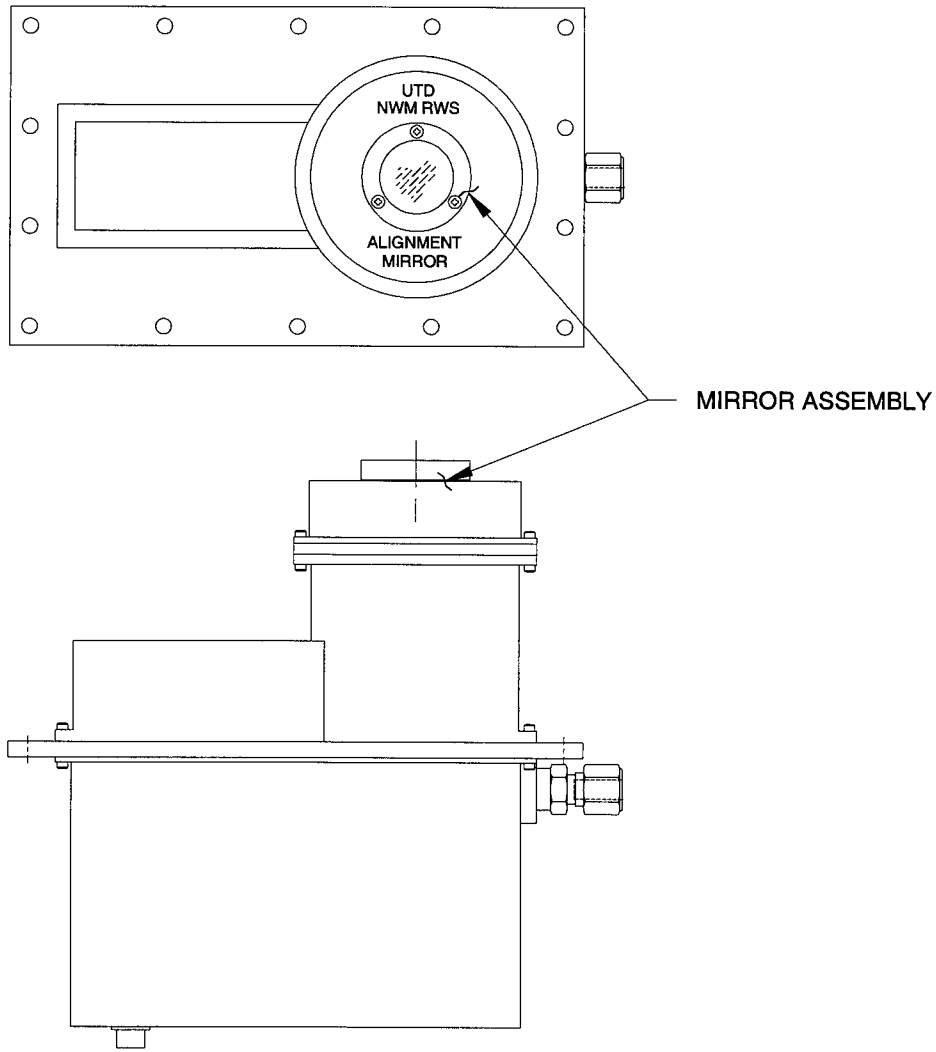

EMI/EMC TEST REQUIREMENTS

- Radiated Emissions: tailored Mil-STD-461E
  - Notches relaxed 30 dB inside S/C shield
  - Bandwidth limits for emissions below 100 kKz,

    6 to 30 dB uV/m
- Conducted Emissions: GEVS-SE narrow band
- Radiated Susceptibility
  - Launch Operations: 20 V/m 10 kHz to 10 Ghz
  - On Orbit: 10 V/m(TBR) @ 150, 400, 1066.8, 2207.5, 2287.5 MHz outside S/C shield
    - 1 V/m at above frequencies inside S/C shield

RADIATED EMISSIONS

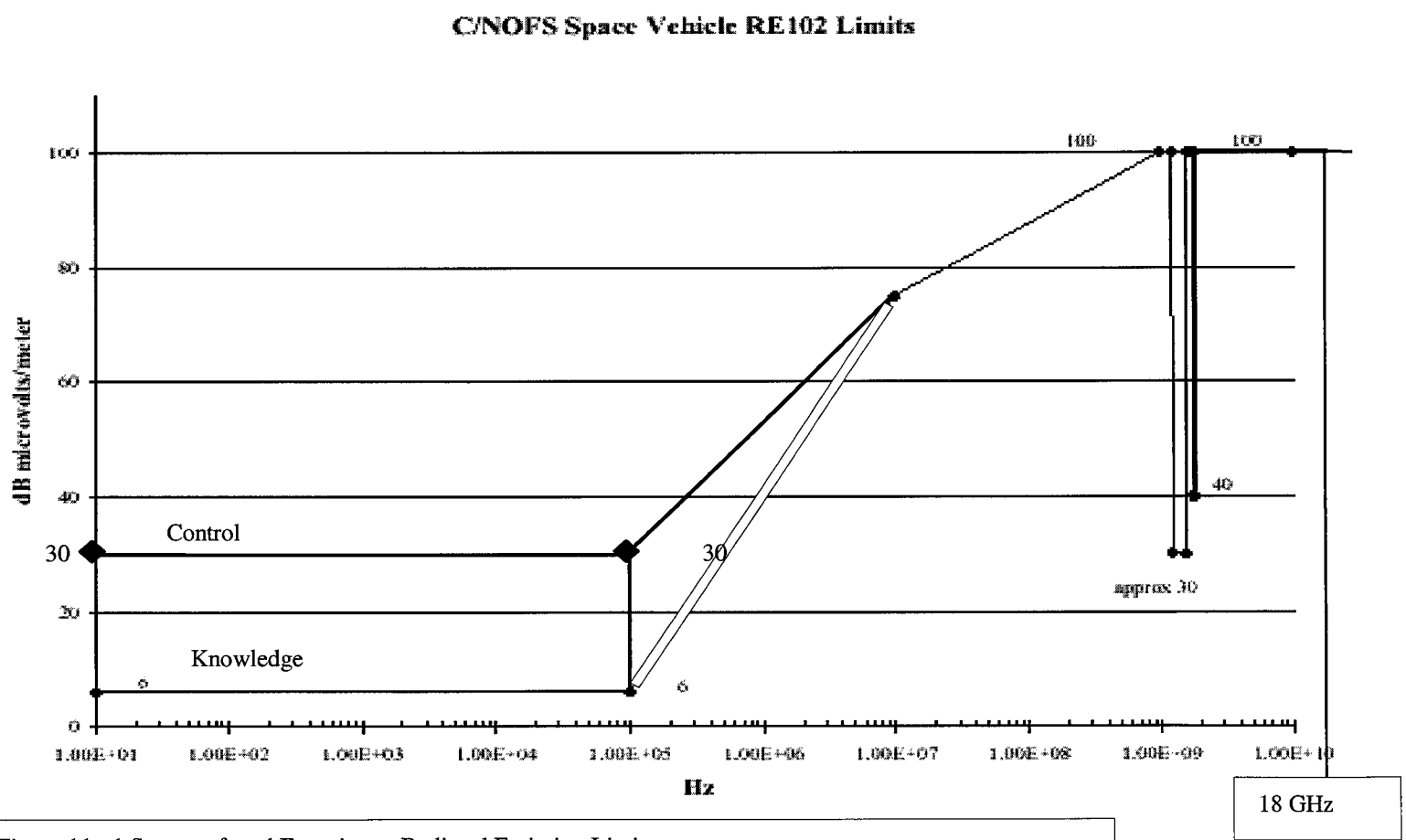

Figure 11 -1 Spacecraft and Experiment Radiated Emission Limits

CINDI
IVM/NWM

GEVS-SE POWERLINE CONDUCTED EMISSION LIMITS (DIFFERENTIAL MODE)

C/NOFS

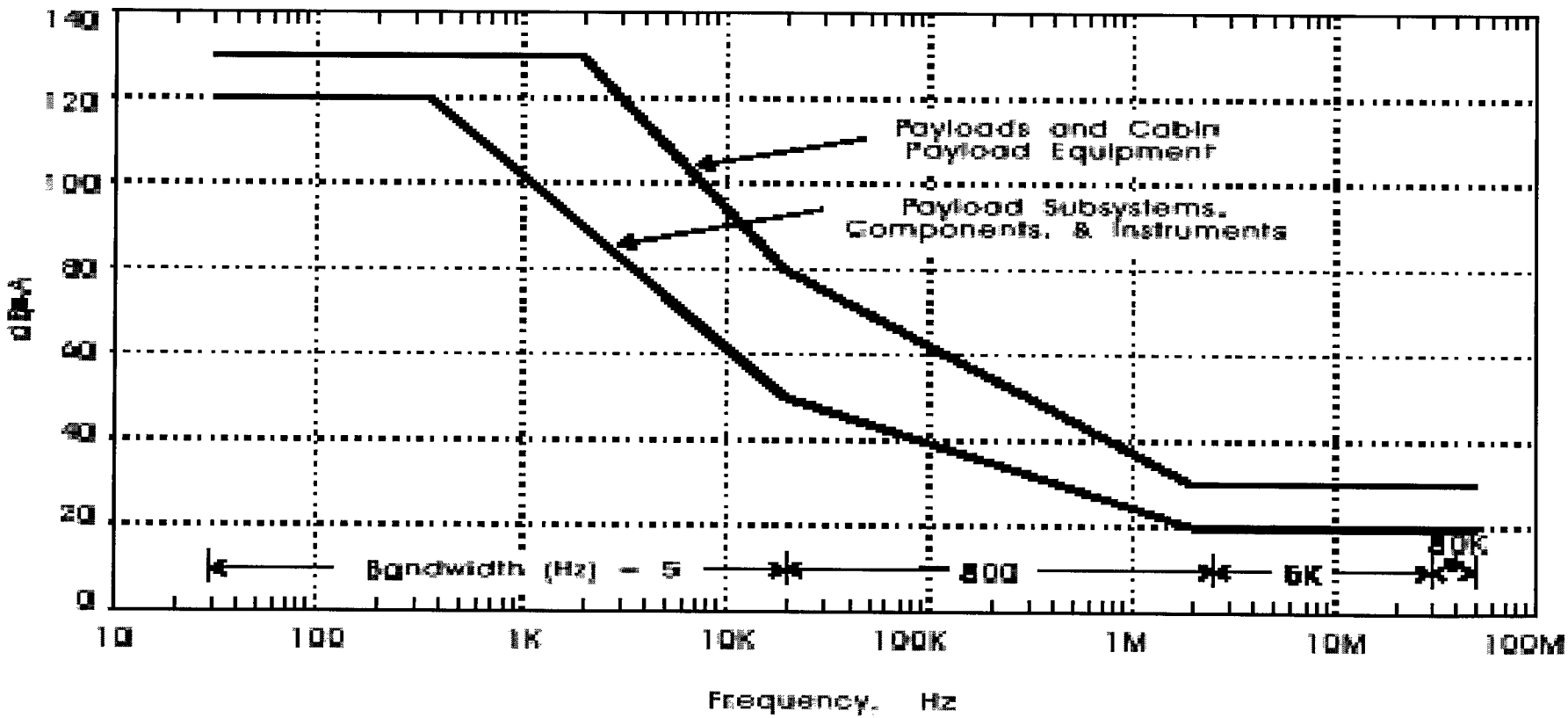

GEVS-SE POWERLINE CONDUCTED EMISSION LIMITS (COMMON MODE)

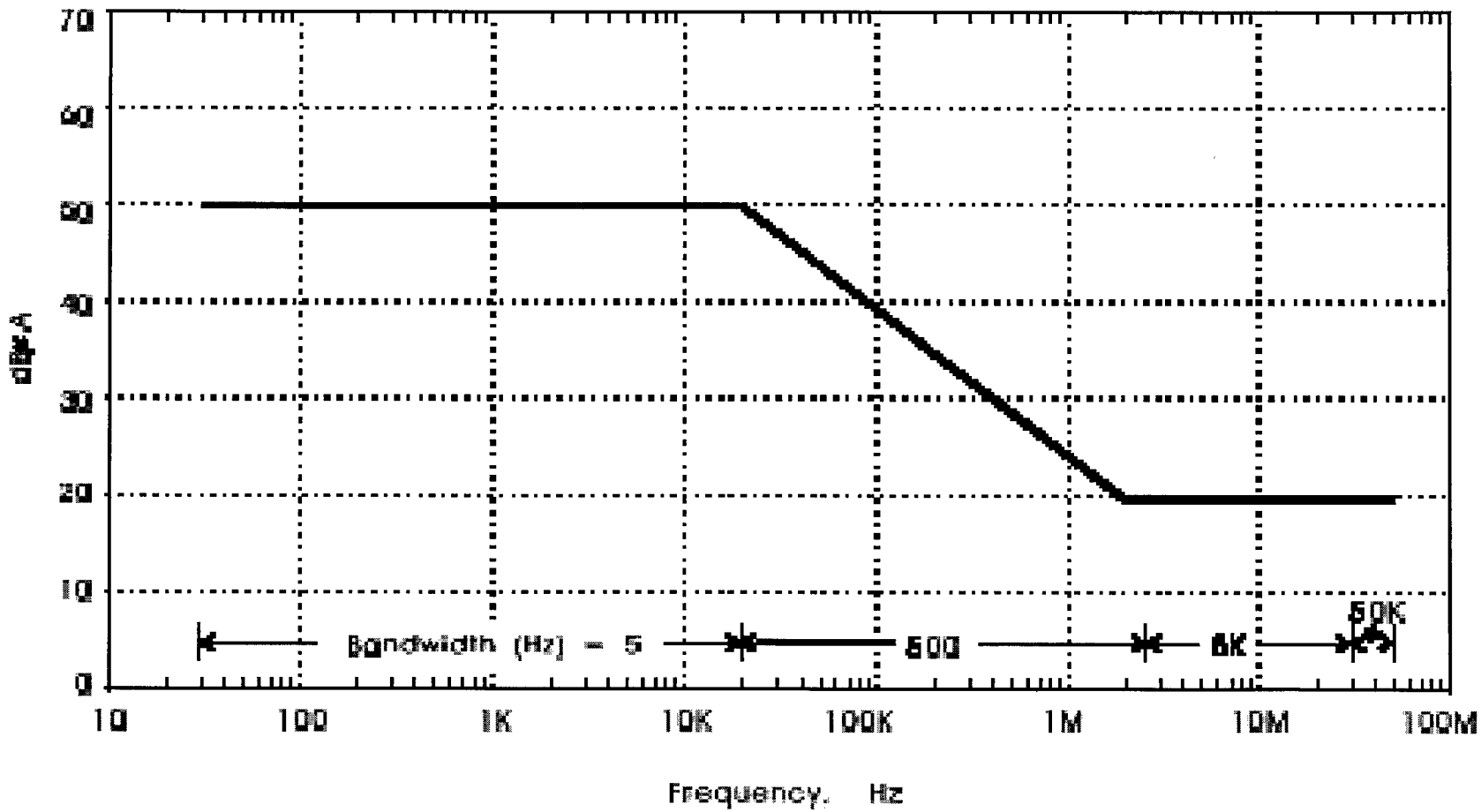

DOCUMENTATION

PRODUCT ASSURANCE 1

- Extensive NASA/DOD experience
- PA plan based on past experience
  - Basic plan previously approved by NASA and DOD projects (UTD132-051)
    - AE, DE, San Marco, DMSP
  - Tailored for SMEX SRQA requirements
    - Preface added to basic plan (UTD139-715)
- PA personnel participate in all program phases including procurement
- Consistent with ISO 9001
- PA Plan submitted to Project and NASA

PRODUCT ASSURANCE 2

- Preface added to base plan to cover SMEX SRQA requirements (UTD139-715)
- SMEX preface overview
  - PI Responsibility
  - Continuous Risk Management
  - Subcontractors and Suppliers
  - Parts and Workmanship Quality
  - System Safety
  - Consistent with ISO 9001
  - Workmanship Standards
  - Assurance Audits and Reporting
  - Failure Reporting
  - Reviews
    - Peer Reviews
    - Semiformal/Formal Reviews
    - Red Team
  - Systems Safety Implementation Plan
  - Safety Data Package
  - EEE Parts Program
    - Parts Lists
    - GIDEP Reports
  - Materials and Processes Control
    - Materials Lists
  - Probabilistic Risk Assessment
  - Contamination Control
  - Software
  - Verification
  - Mission Ops/Reports

PRODUCT ASSURANCE 3

- UTD Base Plan used on previous successful NASA and DOD programs (UTD132-051)
- Base Plan Overview
  - Management
  - Procurement Requirements
  - Audits/Reviews
  - EEE Parts Control
    - Selection/PCB
    - Nonstandard Parts Approval
    - Application
    - Radiation Tolerance
    - Parts List
    - Traceability
    - Procurement Controls
    - GIDEP Reporting and Follow-up
  - Materials and Processes Control
    - Materials Lists
    - MRB
  - Drawing/Specification Control
  - Identification and Traceability
- Analyses
  - Electrical Derating/Stress
  - Radiation Tolerance
  - Reliability Prediction
  - Thermal
  - Structural
- Configuration Management
  - Approval by AFRL/NASA of Interface/Performance Changes from the MRD, ICD or CDR
- Document Change Control
- Procurement Requirements Control
- Nonconformance Control
- Malfunction Reporting to AFRL/NASA
- Fabrication/Workmanship Control
- Inspections and Tests
- Calibration of Test Equipment
  - Traceable to NBS
- Training/Certification of Personnel

PRODUCT ASSURANCE 4
WBH-CSS DOCUMENT TREE

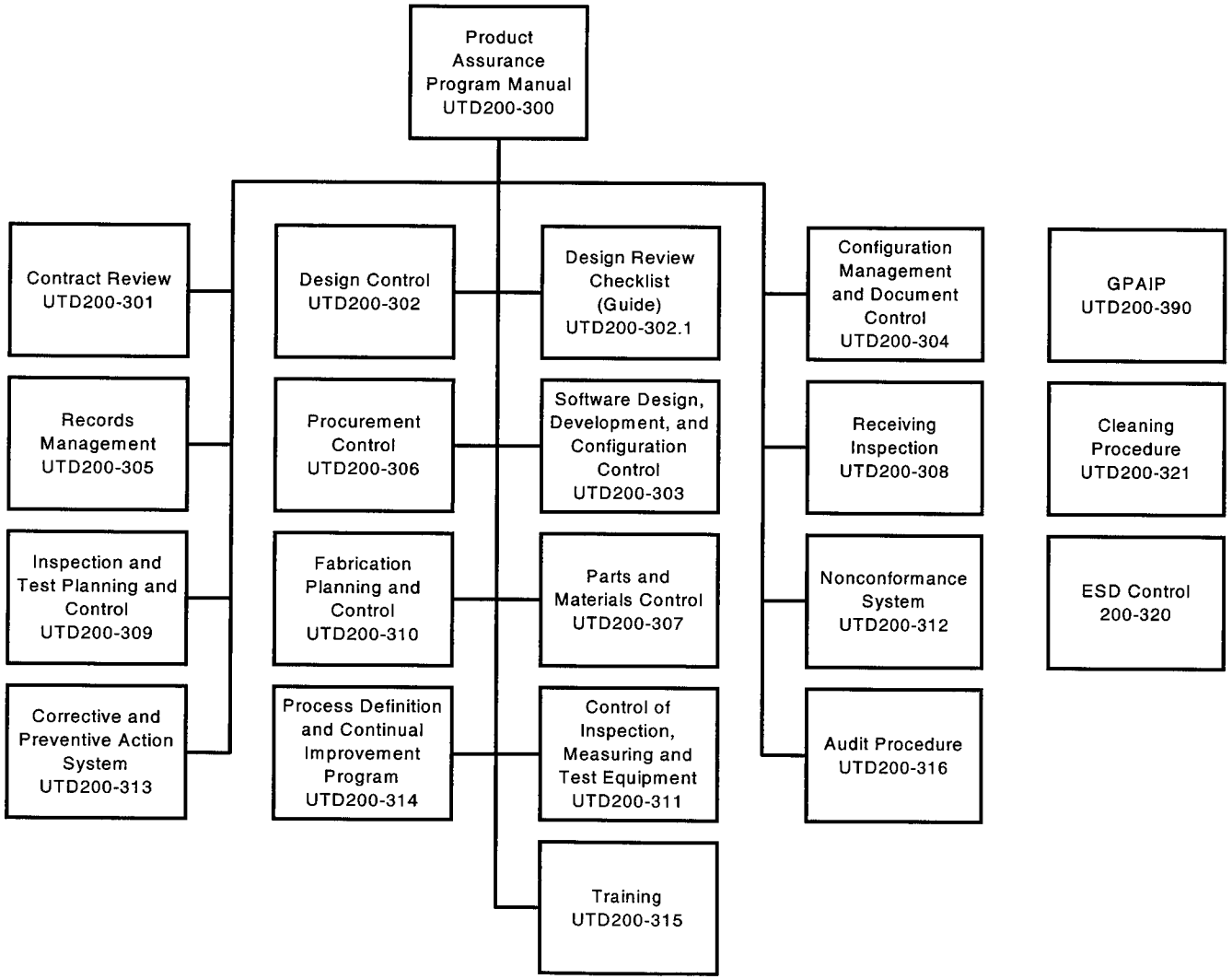

CINDI PROJECT DOCUMENT LIST

- UTD 139-700 CINDI Continuous Risk Management (CRM) Plan
- UTD 139-701 CINDI Contract Safety And Health Plan
- UTD 139-702 IVM Instrument Requirements Document
- UTD 139-703 NWM Instrument Requirments Document
- UTD 139-704 CINDI Contamination Control Plan
- UTD 139-705 CINDI Verification/Validation Plan
- UTD 139-706 IVM End Item Test Procedure
- UTD 139-707 NWM End Item Test Procedure
- UTD 139-708 CINDI EMI/EMC Test Procedure
- UTD 139-709 CINDI Thermal Vacuum Test Procedure
- UTD 139-710 CINDI Physical Properties Test Procedure
- UTD 139-711 CINDI Magnetic Induction Test Procedure
- UTD 139-712 CINDI Random Vibration Test Procedure
- UTD 139-713 CINDI Instrument Handling and Safety Document
- UTD 139-714 CINDI Packing & Shipping Document
- UTD 139-715 CINDI Performance Assurance Implementation Plan/Quality Manual
- UTD 139-716 CINDI Safety Plan

CONFIGURATION CONTROL

- Drawings signed off - placed under control
- Latest issue of master drawings on central server
- Master drawings are read only on server
- Changes by engineering change order only
- Planning sheets (travelers) generated for fabrication & inspection
  - Each step signed by performer
- Single controlled drawing (shop copy) utilized for fab
- Planning sheet/controlled drawings document "as built" condition
- Documentation kept in controlled file

MANUFACTURING APPROACH

- 100% in-house design
- Drawing review and sign-off by responsible personnel including QA
- Planning sheets (travelers) and drawings released for fabrication by cognizant engineers and QA
- Blank boards and mechanical parts (including plating) fabricated by qualified outside vendors
- 100% in-house inspection
- Batch numbers (traceability) assigned to all purchased and fabricated parts/subassys
- Boards and parts cleaned and stored in controlled storage until needed for assembly

ASSEMBLY AND TEST APPROACH

- 100% in-house electrical and mechanical assembly and inspection
- Planning sheets utilized for control and record keeping (part/subassy batch numbers recorded)
- Controlled access assembly and test areas
- Trained/certified assemblers and inspectors
- Laminar flow benches utilized
- All workstations and equipment grounded
- ESD training and wrist straps utilized
- Special tools and test equipment calibrated
- In-house bench, vacuum and temperature testing
- Formal test procedures utilized/test data recorded
- In-process and final inspections
- Instrument environmental testing (vib., TV, EMI, mag., etc.) accomplished at outside vendors
    - Environmental test procedures written by UTD and test vendor

TYPICAL WORK FLOW CHART

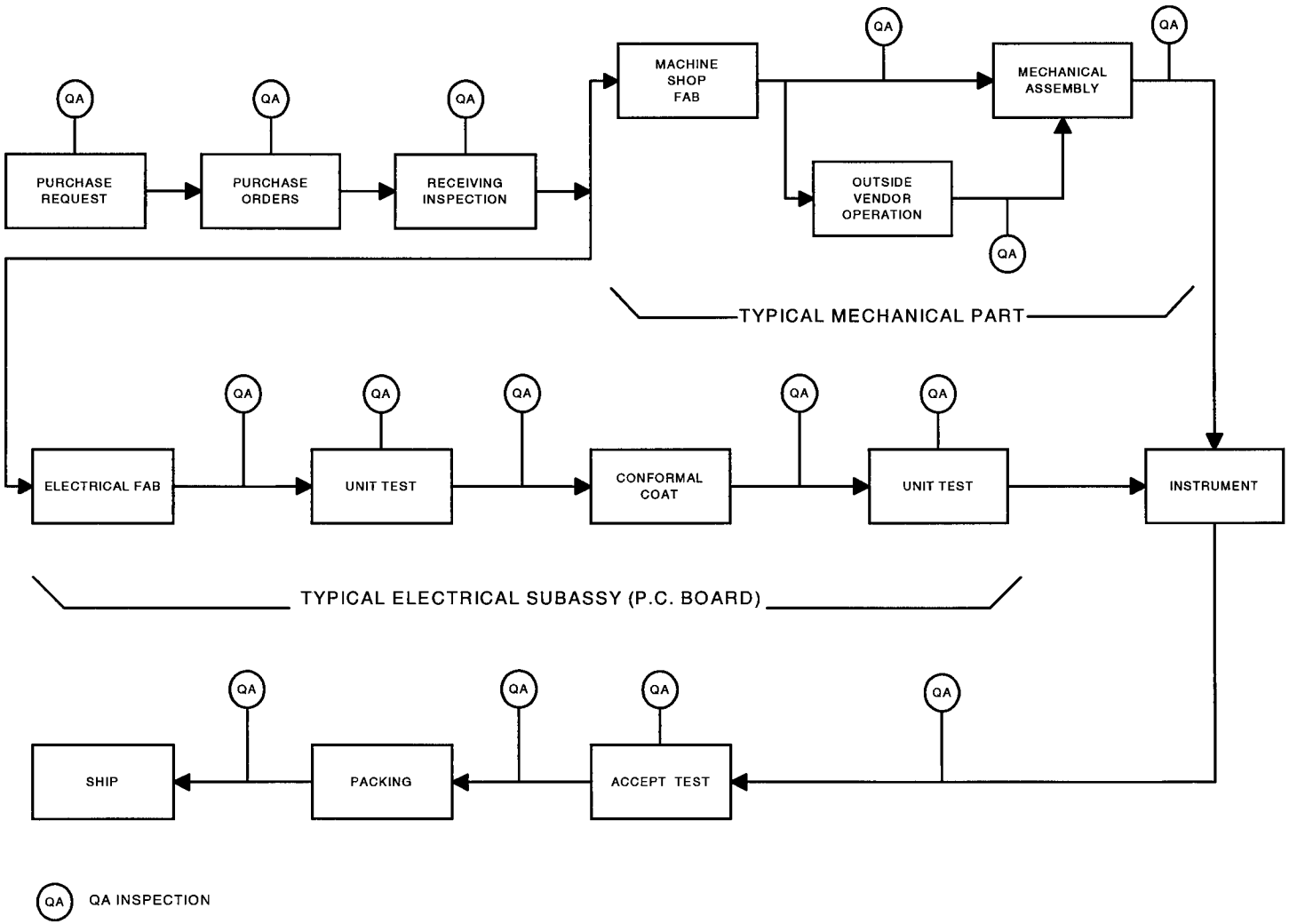

UTD FACILITIES AND EQUIPMENT

- CAD/CAM drafting and machine shop
- PWA inspection and assembly areas
- Controlled access assembly and test areas
- Laminar flow benches
- Oil free vacuum test chamber
- Electronic test and checkout equipment
- Custom designed ion/electron sources for sensor test
- Computational facilities
  - Laboratory & office computers
  - Dedicated UNIX cluster
  - Local supercomputers

CONTAMINATION OVERVIEW

- Moderate Sensitivity to NVR in selected areas
- Particulate contamination is of secondary concern
- Materials Selection and Vent Paths
- Cleanliness Emphasized During All Phases
  - Assy/Test Areas
  - Assembled Clean
  - White Glove Handling
- Oil-Free Vacuum Systems
- Personnel Training
- Project contamination control plan (UTD139-704)
- Utilizing GSFC contamination specialist (Therese Errigo, Swales)
- Coordinating requirements with project
- Extensive past successful experience utilizing the following procedures

UTD CONTAMINATION CONTROL PROCEDURES

- Materials selection/processes
  - NASA RP-1124 utilized: 1.0% TML, 0.1% CVCM
- Cleanliness emphasized during all phases
  - Critical sensor assemblies accomplished on laminar flow (HEPA filtered) benches
  - Instruments cleaned to <700B level
  - Other assembly/testing in controlled environment
  - "White glove" handling
  - Protective covers for sensor apertures
  - Backfill NWM sensors
  - Instrument protected when out of controlled environment
  - Selective cleaning operations
- Oil free vacuum systems for testing
  - Gold plated sensor aperture covers with venting through labyrinths
- Personnel Training
- Instruments kept under class 100,000 conditions or better
  - Assembly and test
  - Integration
  - Encapsulation and carry
- Instrument purging not required
- Red tags removed as late as possible
- Clean exposed gold plated surfaces after red tag removal (UTD personnel)

GENERAL I&T AND SV RECOMMENDATIONS/REQUESTS

- All parties utilize NASA RP-1124 for materials selection
  - 1.0% TML, 0.1% CVCM
- SV venting away from sensors
- "White glove" handling during all phases
- Clean instruments and SV in vicinity of RSAP to < 700B level
- Class 100,000 integration and environmental test areas (see note)
  - > Class 100,000 - Protect in shipping container or bag
    - Bagging considerations
      - Tape lifting aeroglaze paint
      - Solvents attacking aeroglaze paint
- Oil-free, monitored vacuum systems
  - TQCM and cold finger monitors and pre-test certification
    - Empty chamber TQCM level < 300Hz/hour (for 3 hours) with chamber shroud at 100C using a 10MHz TQCM at -20C
    - No pump oil residue on cold finger
  - Gold plated covers over sensor apertures - labyrinth venting
- "Clean" launch vehicle faring
- "Clean" launch vehicle purge gas/air

NOTE: Class 100,000 facilities typically meet class 10,000 90-95% of the time

IVM/NWM MATERIALS AND PROCESSES

- MIL-STD metal plating and finishing
- NASA RP-1124 utilized (1.0% TML, 0.1%CVCM)
- In-house processes and procedures well defined (listed in RQA plan)
- Non-magnetic materials
- Stress corrosion considered in metals selection
- Non-flammable or flame retardant non-metals
- Final parts and materials lists have been submitted
- Processes controlled by written procedures

SAFETY

- All safety info will be provided to AFRL/SA as required
- No heaters planned
- Enclosed volumes vented/no pressurized compartments
- No dangerous materials
- Materials selected using NASA RP-1124 and NHB 8060.1 as guidelines
- No explosive devices, non-explosive initiators or radioactive materials
- Connector mismate prevention achieved by keying/marking
- Handling fixtures not required
- Shipping cases designed to protect instruments from mechanical damage and contamination
- Instruments to remain in shipping cases when not on SV or in test
- Observe standard ESD precautions
- Connector savers utilized to prevent connector wear/damage
- Personnel training
- CINDI Project Safety Plan (UTD139-716)
    - Preface to basic plan - same approach as for PA plan (Basic plan UTD132-050)
- Instrument Handling and Safety Document (UTD139-713)

ORBITAL OPERATIONS

ORBITAL OPERATIONS

1. Operations Overview

IVM

IDM

Offset Rate determines frequency of horizontal and vertical measurements.

Normal Rate ---- Horizontal and Vertical Drifts every 0.5 sec

Slow Rate -------- Horizontal and Vertical Drifts every 8 sec

4 second periods for continuous 32 Hz samples

RPA

Sweep sequence determines sample rate for ram drift, temperature and comp.

Normal Sweep 0.5 sec Short sweep 0.25 sec Long Sweep 1 sec

NWM

CTS

PE valve activation time and period determine time for absolute zero determination.

Normal Mode --- 15 secs after turn-on and every 2560 secs.

RPA

Sweep sequence determines sample rate for ram drift, temperature and comp.

Normal Sweep 0.5 sec Short sweep 0.25 sec Long Sweep 1 sec

ORBITAL OPERATIONS

2. Operating Modes

a) Survey Mode

IVM Normal Rate. RPA Normal Sweep
IVM Slow Rate for some Spread-F studies
NWM Normal Mode Optimized for continuous operation through perigee.

b) Forecast Mode

IVM Normal Mode. RPA Normal Sweep
NWM Normal Mode Optimized for continuous operation through perigee.

c) Payload Burst Mode

No Special Operations

ORBITAL OPERATIONS

4. Initial Checkout

- IVM Drift Meter Repeller Voltage for removal of H+ signal
  - Cycle to determine impact of O+ arrival angle
- IVM RPA retarding voltage sequence for ion composition
  - Whole Orbits with widened resolution for initial composition check
  - Selected Sweep check for optimum resolution.

- NWM Outgas before HV/filament actuated
- NWM RWS and CTS emission current for acceptable signal
  - Different levels during different passes
  - Check before change
- NWM RWS ion source energy for acceptable signal
  - Cycle between 70 and 90 V for optimum level.
- NWM RWS retarding voltage sequence for optimal signal
  - Whole Orbits with widened resolution for initial composition check
  - Selected Sweep check for optimum resolution.
- NWM CTS PE valve timing sequence for optimal signal.

5. Constraints On-Orbit

Instrument Turn-On through UTD approved Command Sequences Only

6. Special Operating Modes

a) Anomaly Resolution

IVM

No High voltage or filaments.

Continue normal ops during anomaly resolution except for overcurrent.

NWM

Turn off High Voltage and filaments during initial anomaly resolution

b) Campaigns

IVM

RPA sweep rate & IDM offset rate maximized for specific objectives.

NWM

Normal operations

c) Backup modes

IVM

No backups

NWM

Switch to redundent filaments if required.

7. On Orbit Calibrations

a) Internal Calibrations

IVM Drift Meter

Automatic Offset Sequence to remove electrometer offsets

NWM CTS

Pressure Equalization valve to remove gauge offsets

Slow s/c spin allows angular sensitivity of IDM, CTS and RWS to be determined.

b) Cross-Calibration with other instruments

E = -VxB allows comparison with VEFI

RPA total ion concentration compares with PLP

8. Typical Day in the Life

a) NWM

Low Voltage instrument elements on at all times.
High voltage multiplier and filaments turned-on below ~500 km
PE valve operation at fixed time after filament turn-on.

b) IVM

Normal Operations Mode on at all times
No daily command sequences required.

9. Success Criteria

A) Minimum

Goals

Describe the local time dependence of the zonal wind near the equator
Understand storm influences ?
Understand how plasma depletions affect the neutral wind ?

Operations

Neutral Wind measurements from NWM.
400 - 500 km ; 1700 - 2400 hrs local time ; 200 passes/month.
3-month operational lifetime
Latitude/Local Time coverage over one season.

Mission

Geophysical parameters integrated into CINDI data system and delivered to NSSDC

9. Success Criteria

B) Comprehensive

Goals

Describe the local time and seasonal dependencies in zonal and meridional neutral wind near the equator.
Describe the local time and seasonal dependencies in zonal and meridional ion drift near the equator.
Understand how the appearance of plasma structure affect the ion and neutral motions ?

Operations

Neutral Wind and Ion Drift measurements from NWM and IVM.
400 - 500 km ; 1700 - 2400 hrs local time ; 200 passes/month.
2-year operational lifetime
Latitude/Local Time coverage for summer winter and equinox.

Mission

Geophysical parameters integrated into CINDI data system and delivered to NSSDC

DATA CENTER REQUIREMENTS

DATA REQUIREMENTS

Major Responsibilities

Algorithm Design	
IVM	Heelis & Earle
NWM	Earle & Heelis
Algorithm Execution	Power & Coley
Instrument Behavior	
IVM	Heelis & Earle
NWM	Mahaffy & Earle
Data Quality	
IVM	Heelis & Earle
NWM	Earle & Heelis

DATA REQUIREMENTS

1. Raw Data

Neutral Wind Meter

a) 16 bit sample -- RWS log electrometer; PE valve open/closed; sync.
b) 16 bit sample -- CTS vert diff amp ; PE valve open/closed; polarity ; sync.
c) 16 bit sample -- CTS horiz diff amp ; PE valve open/closed; polarity ; sync.
d) 16 bit sample -- CTS gauge electrometer ; PE valve open/closed; sync.

Ion Velocity Meter

a) 16 bit sample -- RPA lin electrometer; range ; sync.
b) 16 bit sample -- IDM diff amp ; axis ; polarity ; sync.
c) 16 bit sample -- IDM log electrometer ; sync.

DATA REQUIREMENTS

2. Engineering Unit Conversion

Neutral Wind Meter

a) RWS log electrometer -> Equivalent Current and Retarding Potential
b) CTS vert diff amp -> Vertical Neutral Arrival Angle
c) CTS horiz diff amp -> Horizontal Neutral Arrival Angle
d) CTS gauge electrometer -> Relative Neutral Pressure..

Ion Velocity Meter

a) RPA lin electrometer; range -> Equivalent Current and Retarding Potential
b) IDM diff amp ; axis ; polarity -> Horizontal and Vertical Ion Arrival Angle
c) IDM log electrometer ; sync. -> Relative Ion Density

DATA REQUIREMENTS

3. Derived Data Products

Neutral Wind Meter

a) Equivalent Current and Retarding Potential->	Neutral Drift Ram Component wrt s/c
b) Vertical Neutral Arrival Angle	-> Neutral Drift Vertical Component wrt s/c
c) Horizontal Neutral Arrival Angle	-> Neutral Drift Horizontal Component wrt s/c
d) Relative Neutral Pressure	-> Relative Ambient Pressure Estimate

Ion Velocity Meter

a) Equivalent Current and Retarding Potential	-> Ion Drift Ram Component wrt s/c Ion Comp. and Temp.
b) Horizontal and Vertical Ion Arrival Angle	-> Ion Drift Vertical and Horizontal Components wrt s/c
c) Relative Ion Density	-> Ambient Total Ion Concentration

DATA REQUIREMENTS

4. EDR Algorithm Design

Neutral Wind Meter - FORTRAN code also delivered to C/NOFS Data Center

a) Least Squares Fitting Procedure for Neutral Drift Ram Component wrt s/c
b) Removal of Difference Amplifier Offsets for Neutral Arrival Angles wrt s/c
c) Removal of Spacecraft Velocity Vector for Ambient drifts wrt to s/c
d) Rotation of s/c reference axes to Earth Fixed Coordinates.

Ion Velocity Meter - FORTRAN code also delivered to C/NOFS Data Center

a) Least Squares Fitting Procedure for Ion Drift Ram Component wrt s/c
Ion Temp and Composition
b) Removal of Difference Amplifier Offsets for Ion Arrival Angles wrt s/c
c) Removal of Spacecraft Velocity Vector for Ambient drifts wrt to s/c
d) Rotation of s/c reference axes to Earth Fixed Coordinates.

DATA REQUIREMENTS

5. Data Products

Neutral Wind Meter - Digital data file in CINDI Data Archive

a) Neutral Wind Vector in s/c coordinates and Earth Fixed Coordinates.
b) Cross Track wind components in s/c coordinates.
c) Measurement location in UT and Earth Fixed Coordinates

Ion Velocity Meter - Digital data file in CINDI Data Archive

a) Ion Drift Vector in s/c coordinates and Earth Fixed Coordinates.
b) Total Ion Concentration, Ion Temperature, Ion Composition
c) Cross Track ion drift components in s/c coordinates.
d) Measurement location in UT and Earth Fixed Coordinates

DATA REQUIREMENTS

6. Required Spacecraft and Operations Data

a) CINDI instrument data packets
UT stamped

b) Spacecraft Reference Axes.
Pitch, Roll and Yaw defined wrt spacecraft velocity vector

c) Spacecraft Location in Earth Fixed frame.
UT, Geographic Latitude, Geographic Longitude,
Radial Distance from Earth center.

d) Direction cosines of s/c velocity vector in Earth Fixed frame.
UT stamped

e) Interpolated data required to provide 1/4 second temporal resolution.

DATA REQUIREMENTS

7. C/NOFS Data Center Algorithm

Modules

a) Extraction of Instrument Outputs from Data Packets

- I-V curves for RPA
- Deranged Difference Amplifier Voltage Levels for IDM
- I-V Curves for RWS
- Deranged Difference Amplifier Voltage Levels for CTS
- Crude display for State of Health and Operational Profile

b) Geophysical Parameters in s/c Reference Frame

- Constrained Levenburg-Marquart Procedure for analysis of I-V curves.
  - Separate modules for RPA and RWS
- Use of Pitch, Roll, and Yaw data and s/c velocity to derive transverse drifts.
  - Separate modules for IDM and CTS

c) Many vectors may need rotation into Earth fixed coordinate system.

- UTD will assist in development of common algorithm for this procedure.